03523545

Form P5815
Edition 13
June, 1998

OPERATION AND MAINTENANCE MANUAL FOR MODELS 4800D, 4800K, 4800M, 4800N, 4800P, 4800Q, 4800S AND 4800U NONREVERSIBLE AND MODELS 4840D, 4840K, 4840M, 4840N, 4840P, 484Q, 4840S AND 4840U REVERSIBLE MULTI–VANE® AIR MOTORS

WARNING

IMPORTANT SAFETY INFORMATION ENCLOSED.
READ THIS MANUAL BEFORE OPERATING TOOL.

FAILURE TO OBSERVE THE FOLLOWING WARNINGS COULD RESULT IN INJURY.

- Always operate, inspect and maintain this motor in accordance with American National Standards Institute Safety Code for Portable Air Tools (ANSI B186.1).
- For safety,top performance and maximum durability of parts, operate this motor at 90 psig (6.2 bar/620 kPa) air pressure at the inlet with 1/4" (6 mm) air supply hose.
- Always turn off the air supply and disconnect the air supply hose before installing, removing or adjusting any accessory on this motor or before performing any maintenance on this motor.
- Keep hands, loose clothing and long hair away from rotating end of motor.
- Anticipate and be alert for sudden changes in motion during start up and operation of any motor.
- Motor shaft may continue to rotate briefly after throttle is released.
- Do not lubricate motor with flammable or volatile liquids such as kerosene, diesel or jet fuel.
- Do not remove any labels. Replace any damaged label.
- Use accessories recommended by Ingersoll–Rand.
- This motor is not designed for working in explosive atmospheres.
- This motor is not insulated against electric shock.

NOTICE

The use of other than genuine Ingersoll–Rand replacement parts may result in safety hazards, decreased tool performance and increased maintenance, and may invalidate all warranties.

Ingersoll–Rand is not responsible for customer modification of tools for applications on which Ingersoll–Rand was not consulted.

Repairs should be made only by authorized, trained personnel. Consult your nearest Ingersoll–Rand Authorized Servicenter.

It is the responsibility of the employer to place the information in this manual into the hands of the operator.

Refer All Communications to the Nearest
Ingersoll–Rand Office or Distributor.

© Ingersoll–Rand Company 1998

Printed in U.S.A.

INGERSOLL-RAND®
AIR MOTORS

WARNING LABEL IDENTIFICATION

⚠ WARNING

FAILURE TO OBSERVE THE FOLLOWING WARNINGS COULD RESULT IN INJURY.

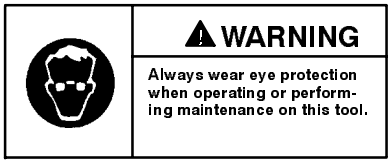

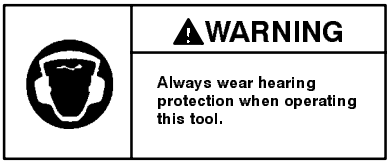

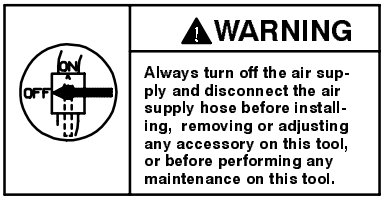

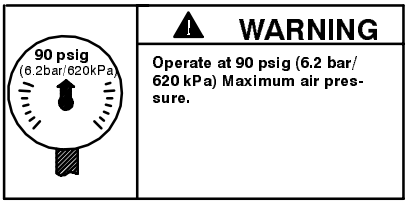

PLACING TOOL IN SERVICE

LUBRICATION

Ingersoll-Rand No. 50

Ingersoll-Rand No. 28

Always use an air line lubricator with this motor. We recommend the following Filter–Lubricator–Regulator Unit:

No. C22-04-G00

Where the lubricator cannot be permanently mounted, use Ingersoll–Rand No. 3LUB8 Lubricator.
We recommend the use of an air line lubricator in the air supply line. Attach the unit as close to the tool as practical. For permanent installations, we recommend using an Ingersoll–Rand C22–04–G00 Filter–Lubricator–Regulator Unit. These units have 1/2" pipe tap inlet and outlet. The 3LUB8 has 1/6 pt (79 mL) capacity; the C22–04–G00 has 1/2 pt (237 mL) capacity. Larger capacity units may be used, but do not use a unit having less than 1/2" pipe tap inlet and outlet.

After each 40 000 cycles or one month, whichever occurs first, inject 1.5 cc of Ingersoll–Rand No. 28 Grease into the Grease Fitting (60).

DIRECTION OF SPINDLE ROTATION

Series 4800 Nonreversible Motors can be assembled so that the Spindle rotates either clockwise or counterclockwise. To reverse the direction of Spindle rotation:

1. Remove the motor assembly from the Motor Housing (10).
2. Remove one End Plate and Bearing assembly from the motor.
3. Lift the Cylinder (19) from the Rotor (17), turn it end for end, and slide it back over the Rotor.
4. Install the End Plate and Bearing assembly on the rotor hub and install the assembled motor in the Housing.
5. Remove the three Backhead Cap Screws (11) and rotate the Backhead (2) and Backhead Gasket (3) 120° so that the cavity in the face of the Backhead is in alignment with the alternate set of holes in the back face of the Motor Housing. When the Backhead is correctly applied, the cavity will be over the letter "**F**" for counterclockwise spindle rotation (when facing the end of the Spindle), and over the letter "**R**" for clockwise rotation.
   The rotational direction of an assembled Nonreversible Series 4800 Motor can be determined by removing the Air Strainer (1) and looking through the tapped opening to see whether the letter "**F**" or letter "**R**" is visible. Apply the Backhead on Series 4840 Reversible Motors so that each inlet port aligns with a group of three holes through the housing rear wall.

NOTICE

A four-way Throttle Valve (whether manually, remotely, or automatically controlled) must be used in the air supply line to Series 4840 reversible motors, as one motor inlet is expelling secondary exhaust air, and therefore must be open to atmosphere whenever the opposite inlet is admitting live air to the motor. The use of any throttle valve that closes or restricts the secondary exhaust line will result in sufficient back pressure to drastically reduce the speed and power of the motor.

When the application requires a separate Throttle Valve in each air line, the two three-way valves must be used.

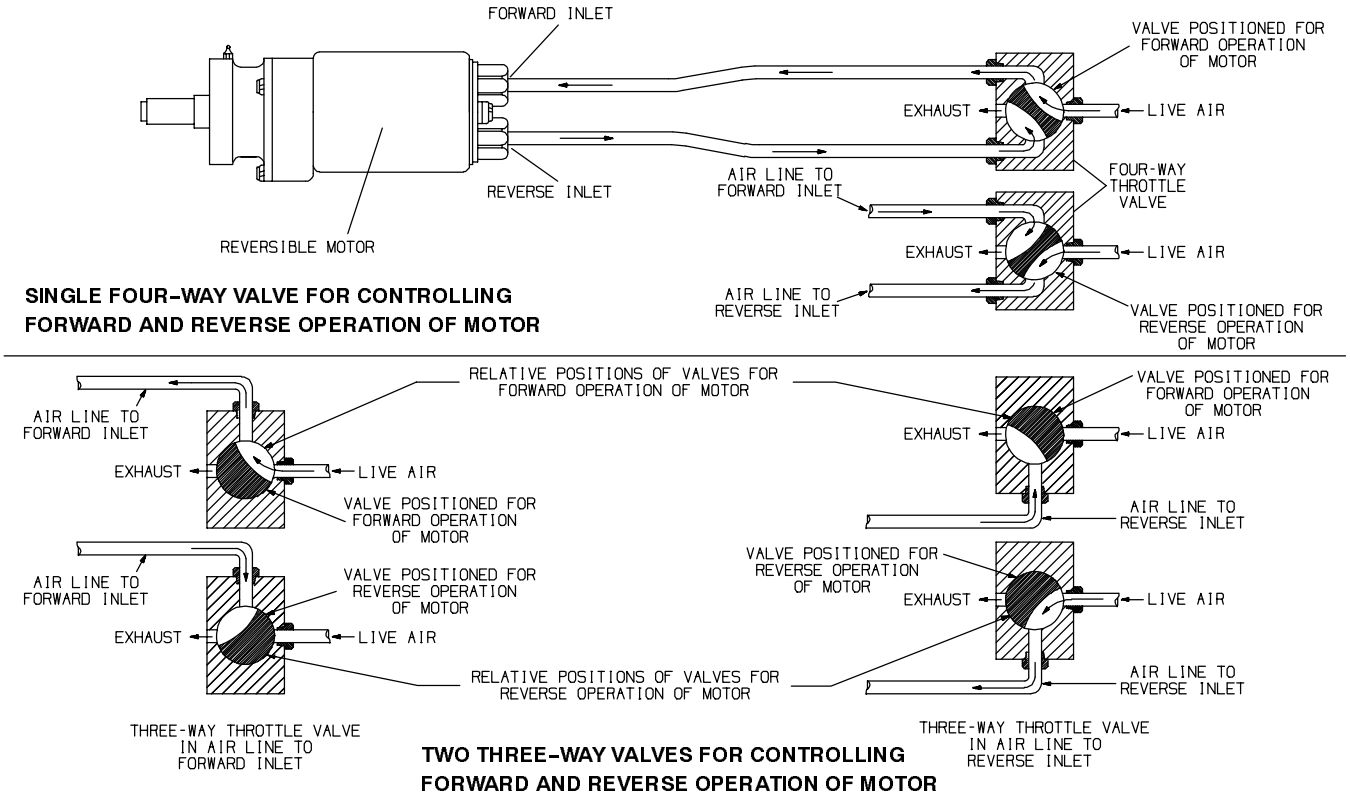

SINGLE FOUR-WAY VALVE FOR CONTROLLING FORWARD AND REVERSE OPERATION OF MOTOR

TWO THREE-WAY VALVES FOR CONTROLLING FORWARD AND REVERSE OPERATION OF MOTOR

(Dwg. TPB176)

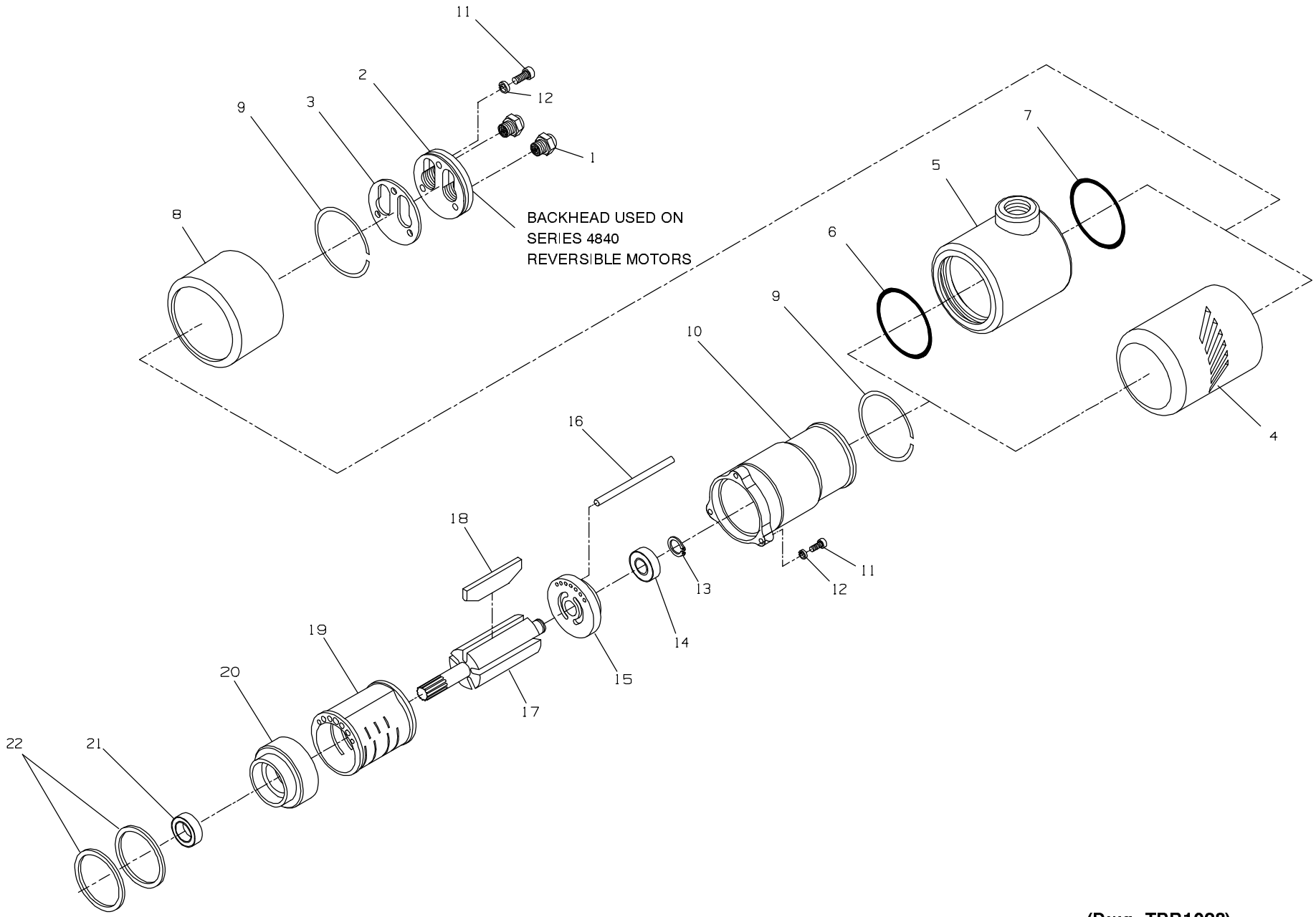
11
12
1
2
3
9
8
BACKHEAD USED ON
SERIES 4840
REVERSIBLE MOTORS
7
5
6
9
10
4
16
18
11
12
13
14
15
17
19
20
21
22

(Dwg. TPB1028)

			PART NUMBER FOR ORDERING
	1	Air Strainer (1 for non–reversible models; 2 for reversible models)	R4800–565
	2	Backhead	
		for non–reversible models	R4800–102
		for reversible models	R4840–102
•	3	Backhead Gasket	
		for non–reversible models	R4800–283
		for reversible models	R4840–283
	4	Exhaust Deflector (with slotted front exhaust)(standard)	R4800–23
		Exhaust Deflector Assembly (with 1” pipe tap exhaust)(optional)	R4800–A123
	5	Exhaust Deflector	R4800–123
•	6	Deflector Front Seal	R4800–210
•	7	Deflector Rear Seal	M0V003AA–739
	8	Muffler	R4800–23
	9	Exhaust Deflector Retaining Ring (2)	R4800–323
	10	Motor Housing	R4800–40
	11	Cap Screw (6)	5080–638
	12	Lock Washer (6)	8U–58
	13	Rear Rotor Bearing Retainer	R4800–119
•	14	Rear Rotor Bearing	R2–24A
•	15	Rear End Plate	R4800–12
	16	Cylinder Dowel	R4800–98
	17	Rotor	
		for D, M, P, or S ratios (9 teeth)	R4800M–53
		for K ratio (14 teeth)	R4800K–53
		for N ratio (6 teeth)	R4900N2–53
		for Q ratio (13 teeth)	R4901–53
		for U ratio (7 teeth)	R4800U–53
•	18	Vane Packet (set of 5 Vanes)	R4800–42–5
	19	Cylinder	
		for non–reversible models	R4800–3
		for reversible models	R4840–3
•	20	Front End Plate	R4800–11
•	21	Front Rotor Bearing	R3H–24
	22	Motor Retaining Washer (2)	R4800–81

• To keep downtime to a minimum, it is desirable to have on hand certain repair parts. We recommend that you stock one (pair or set) of each part indicated by a bullet (•) for every four tool in service.

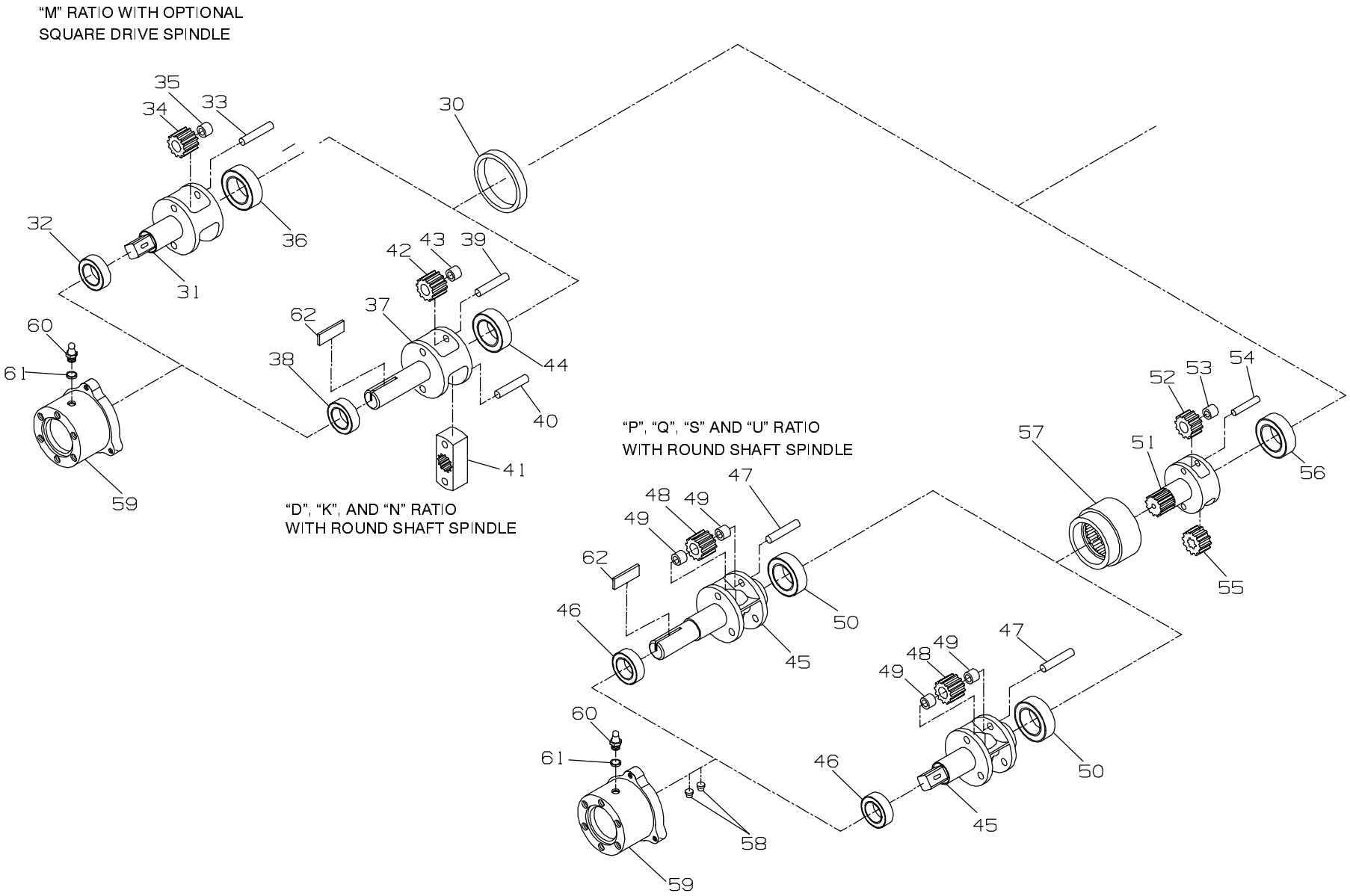

(Dwg. TPA1349–1)

PART NUMBER FOR ORDERING

	30	Motor Retaining Ring (for D, K, M or N ratio)	R4800–118
		Spindle Assembly	
		Round Keyed Shaft (standard for M ratio)	R4800M–A108
		5/8” Square Drive Shaft (optional for M ratio)	R4800M–A8
	31	Spindle	
		Round Keyed Shaft	R4800M–108
		5/8” Square Drive	R4800M–8
•	32	Spindle Front Bearing	R4800–510
	33	Spindle Planet Gear Shaft (2)	R4800–191
	34	Spindle Planet Gear (31 teeth) (2)	R4800M–9
•	35	Spindle Planet Gear Bearing (1 for each Gear)	R4800–654
•	36	Spindle Rear Bearing	W44–97
	37	Spindle (round keyed shaft)	
		for D ratio	R4800M–108
		for K ratio	R4800K–108
		for N ratio	R4800N–108
•	38	Spindle Front Bearing (for D, K or N ratio)	R4800–510
	39	Spindle Planet Gear Shaft (for K or N ratio) (3)	R4800–191
	40	Spindle Drive Plate Shaft (for D ratio) (2)	R4800–191
	41	Spindle Drive Plate (for D ratio)	R4800M–171
	42	Spindle Planet Gear (for N ratio) (33 teeth) (3)	R4900N2–9
	42	Spindle Planet Gear (for K ratio) (29 teeth) (3)	R4800K–10
•	43	Spindle Planet Gear Bearing (1 for each Gear)	R4800–654
•	43	Spindle Planet Gear Bearing (for N ratio) (3)	R4800–654
	44	Spindle Rear Bearing (for D, K or N ratio)	W44–97
		Spindle Assembly	
		Round Keyed Shaft (standard for P, Q or S ratio)	R4800P–A108
		Round Keyed Shaft (standard for U ratio)	R4801U–A108
		3/4” Square Drive Shaft (optional for P, Q or S ratio)	R4800P–A8
		3/4” Square Drive Shaft (optional for U ratio)	R4801U–A8
		1” Square Drive Shaft (optional for U ratio)	R4801U–A208
	45	Spindle	
		Round Keyed Shaft (standard for P, Q or S ratio)	R4800P–108
		Round Keyed Shaft (standard for U ratio)	R4801U–108
		3/4” Square Drive Shaft (optional for P, Q or S ratio)	R4800P–8
		3/4” Square Drive Shaft (optional for U ratio)	R4801U–8
		1” Square Drive Shaft (optional for U ratio)	R4801U–208
		for all P, Q or S ratio spindles	R4800–510
		for all U ratio spindles	MR–988
•	46	Spindle Front Bearing	
		for all P, Q or S ratio spindles	R4800–510
		for all U ratio spindles	MR–988

- To keep downtime to a minimum, it is desirable to have on hand certain repair parts. We recommend that you stock one (pair or set) of each part indicated by a bullet (•) for every four tools in service.

PART NUMBER FOR ORDERING

	47	Spindle Planet Gear Shaft	
		for all P, Q, or S ratio spindles	R4800-190
		for all U ratio spindles	R4801U-191
	48	Spindle Planet Gear (3)	
		for all P, Q or S ratio spindles (16 teeth)	R4800P-9
		for all U ratio spindles (18 teeth)	R4801U-A9
•	49	Spindle Planet Gear Bearing (2 for each Gear)	
		for all P, Q or S ratio spindles	WWU10-510
		for all U ratio spindles	R4801U-510
•	50	Spindle Rear Bearing	R4800-97
		Gear Head Assembly	
		for P ratio	R4800P-A216
		for Q ratio	R4800Q-A216
		for S ratio	R4800S-A216
		for U ratio	R4801U-A216
	51	Gear Head	
		for P ratio	R4800P-216
		for Q ratio	R4800Q-216
		for S ratio	R4800S-216
		for U ratio	R4801U-216
	52	Gear Head Planet Gear (2)	
		for P ratio	R4800P-10
		for Q ratio	R4800Q-10
		for S ratio	R4800S-10
		for U ratio	R4801U-10
•	53	Gear Head Planet Gear Bearing (1 for each Gear)	R4800-654
	54	Gear Head Planet Gear Shaft	R4800-191
	55	Rotor Pinion (for P ratio only)	R4800-17
•	56	Gear Head Bearing	W44-97
	57	Internal Gear (for P, Q, S or U ratio)	R4800-406
	58	Internal Gear Key (for P, Q, S or U ratio) (2)	R4800-407
	59	Gear Case	
		for D, K, M or N ratio	R4800M-37
		for P, Q or S ratio	R4800P-37
		for U ratio	R4801U-37
	60	Grease Fitting	R1-188
	61	Grease Fitting Washer	R3-92A
	62	Spindle Key	107-54

• To keep downtime to a minimum, it is desirable to have on hand certain repair parts. We recommend that you stock one (pair or set) of each part indicated by a bullet (•) for every four tools in service.

MAINTENANCE SECTION

⚠ WARNING

Always use protective eyewear when performing maintenance on a motor or operating a motor. Always turn off the air supply and disconnect the air supply line before installing, removing or adjusting any accessory on this motor or before performing any maintenance on this motor. Failure to do so could result in injury.

DISASSEMBLY

General Instructions

1. Do not disassemble the motor any further than necessary to replace or repair damaged parts.
2. Do not press any needle bearing from a part unless you have a new needle bearing on hand for installation. Needle bearings are always damaged during the removal process.
3. When grasping a tool in a vise, always use leather–covered or copper–covered vise jaws to protect the surface of the part or motor and help prevent distortion. This is particularly true of threaded members and housings.
4. Do not remove any part which is a press fit in or on a subassembly unless the removal of that part is necessary for repairs or replacement.
5. When removing the Planet Gear Shafts (33, 39, 40 or 47), support the motor end of the assembly and press the Shafts out toward the motor end. The shaft holes through the web are slightly tapered so that the Shafts have a tighter fit in the front web.

Disassembly of the Motor

1. Unscrew and remove one Air Strainer (1) for non–reversible models and two Air Strainers for reversible models from the Backhead (2).
2. Using a 3/16" hex wrench, unscrew and remove the three Backhead Cap Screws (11), Lock Washers (12) and separate the Backhead from the Motor Housing (10). Remove the Backhead Gasket (3).
3. **For Standard Exhaust models,** slide the Exhaust Deflector (4) and Muffler (8) off the Motor Housing. **For Piped–Away Exhaust models,** slide the Exhaust Deflector (5) and Muffler (8) off the Motor Housing and remove the Exhaust Deflector Front Seal (6) and Exhaust Deflector Rear Seal (7) from the grooves inside the Exhaust Deflector.
4. Using a 3/16" hex wrench, unscrew and remove the three Gear Case Cap Screws (11) and Lock Washers (12).
5. Separate the assembled Gear Case (59) from the Motor Housing and set the assembled Gear Case aside.
6. **For D, K, M or N ratio motors,** remove the Motor Spacer (30) and two Motor Retaining Washers (22). **For all other models,** remove the two Motor Retaining Washers (22).
7. Grasp the pinion of the Rotor (17) and pull the assembled motor out of the Motor Housing. It may be necessary to gently tap the face of the Motor Housing with a plastic hammer to jar the assembly free.
8. Grasp the Cylinder (19) in one hand and using a plastic hammer, sharply rap the spline on the end of the Rotor to remove the Front End Plate (20) and Front Rotor Bearing (21) which will free the Cylinder and Vanes (18). Remove the Cylinder Dowel (16).
9. Jar the Front Rotor Bearing out of the Front End Plate by bumping the End Plate on a wooden block.
10. Using snap ring pliers, remove the Rear Rotor Bearing Retainer (13) from the hub of the Rotor and remove the Rear Rotor Bearing (14) and Rear End Plate (15).

Disassembly of the Gearing

1. **For P, Q, S or U ratio,** grasp the Gear Head Bearing (56) and pull the assembled Gear Head (51) out of the Gear Case (59).
2. **For P, Q, S or U ratio,** using a bearing puller, pull the Gear Head Bearing off the rear hub of the Gear Head.
3. **For P, Q, S or U ratio,** support the short hub end of the Gear Head on the table of an arbor press and press the Gear Head Planet Gear Shafts (54) from the Gear Head. Make certain the Shafts are pressed out toward the short hub because the holes in the Gear Head are tapered smaller toward the front of the Gear Head.
4. **For P, Q, S or U ratio,** remove the Gear Head Planet Gears (52) from the Gear Head.
5. **For P ratio,** remove the Rotor Pinion (55).
6. **For P, Q, S or U ratio,** if the Gear Head Planet Gear Bearings (53) must be replaced, press them from the Planet Gears.
7. Holding the Gear Case, push the output end of the Spindle (31, 37 or 45) to move the Spindle Assembly out the motor end of the Gear Case.
8. Using a bearing puller, pull the Spindle Rear Bearing (36, 44 or 50) off the rear hub of the Spindle.
9. Using a bearing puller, pull the Spindle Front Bearing (32, 38 or 46) off the front hub of the Spindle.

10. **For D ratio,** support the short hub end of the Spindle on the table of an arbor press and press the Spindle Drive Plate Shafts (40) from the Spindle. Make certain the Shafts are pressed out toward the short hub because the holes in the gear frame of the Spindle are tapered smaller toward the output end of the spindle shaft. Remove the Drive Plate (41) from the Spindle.
    For all other ratios, support the short hub end of the Spindle on the table of an arbor press and press the Spindle Planet Gear Shafts (33, 39 or 47) from the Spindle. Make certain the Shafts are pressed out toward the short hub because the holes in the gear frame of the Spindle are tapered smaller toward the output end of the spindle shaft. Remove the Spindle Planet Gears (34, 42 or 48) from the Spindle.
11. If the Spindle Planet Gear Bearings (35, 43 or 49) must be replaced, press them from the Planet Gears.
12. **For P, Q, S or U ratio,** insert a hooked tool into the flange end of the Gear Case and catching the spindle end of the Internal Gear (57), pull it from the Gear Case.

ASSEMBLY

General Instructions

1. Always press on the **inner** ring of a ball–type bearing when installing the bearing on a shaft.
2. Always press on the **outer** ring of a ball–type bearing when pressing the bearing into a bearing recess.
3. Whenever grasping a tool or part in a vise, always use leather–covered or copper–covered vise jaws. Take extra care not to damage threads or distort housings.
4. Except for bearings, clean every part and wipe every part with a thin film of oil before installation.
5. Check every bearing for roughness. If an open bearing must be cleaned, wash it thoroughly clean suitable solution and dry with a clean cloth. Sealed or shielded bearings should not be cleaned. Work grease into every bearing before installation.
6. Apply a film of O–ring lubricant to every O–ring before installation.
7. When installing the Planet Gear Shafts (25 or 36), support the spindle end of the assembly and press the Shafts in toward the spindle end. The shaft holes through the web are slightly tapered so that the Shafts have a tighter fit in the front web.
8. Unless otherwise noted, always press on the stamped end of a needle bearing when installing a needle bearing into a recess. When installing Spindle Planet Gear Bearings (49), always insert one Bearing into each end of the Gear. **Never use one Bearing as a pressing plug for the second Bearing.** Use a bearing inserting tool similar to the one shown in Dwg. TPD786.

NEEDLE BEARING INSERTING TOOL

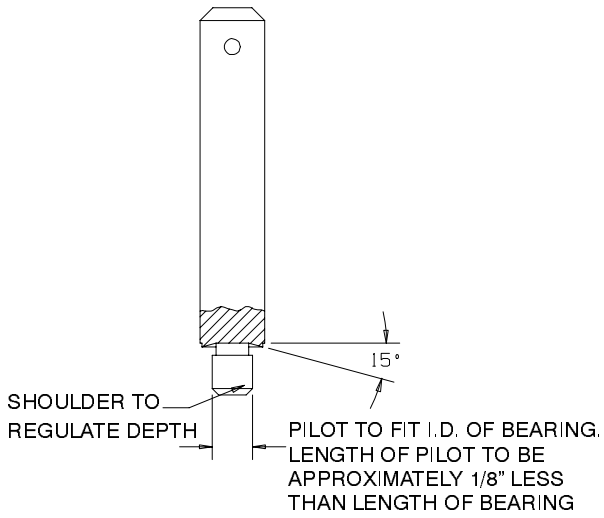

(Dwg. TPD786)

Assembly of the Gearing

1. **For P, Q, S or U ratio,** if the Spindle Planet Gear Bearings (49) were removed from the Spindle Planet Gears (48), press new Bearings into the Gears using a needle bearing inserting tool. Press one Bearing in from each end of the Gear until they are flush with the face of the Gear. If any Gears are damaged, install a complete new set of Gears. Do not mix old Gears with new Gears in the same motor.
    For K, M or N ratio, if the Spindle Planet Gear Bearings (35 or 43) were removed from the Spindle Planet Gears (34 or 42), press new Bearings into the Gears using a needle bearing inserting tool. If any Gears are damaged, install a complete new set of Gears. Do not mix old Gears with new Gears in the same motor.
2. **For D ratio,** support the web at the output end of the Spindle (37) on the table of an arbor press and position the Spindle Drive Plate (41) inside the web making certain that the pin holes are in alignment. The holes in the webs of the Spindle are tapered and smaller toward the output end of the Spindle. Press both Spindle Drive Plate Shafts (40) through the rear web and Drive Plate into the front web until the Shafts are flush with the face of the rear web.
    For all other ratios, support the web at the output end of the Spindle (31, 37 or 45) on the table of an arbor press and position a Spindle Planet Gear with Bearings in the web. The holes in the webs of the Spindle are tapered and smaller toward the output end of the Spindle. Press a Spindle Planet Gear Shaft (33, 39 or 47) through the rear web and Bearings into the front web until the Shaft is flush with the face of the rear web.

3. **For all ratios except D ratio,** repeat Step 2 with the remaining Spindle Planet Gears and Bearings.
4. Stand the Spindle, output end upward, on the table of an arbor press and using a piece of tubing that will clear the Spindle, press the Spindle Front Bearing (32, 38 or 46) onto the Spindle.
5. Invert the Spindle and without applying pressure to the Spindle Front Bearing, press the Spindle Rear Bearing (36, 44 or 50) onto the short hub of the Spindle.
6. **For P, Q, S or U ratio,** align one of the exterior slots on the Internal Gear (57) with the two Internal Gear Keys (58) located opposite the Grease Fitting (60) in the Gear Case (59). Push the Internal Gear into the Gear Case until it stops against the gear teeth in the Case.
7. Apply lubricant to the gearing and shaft and insert the assembled Spindle, output end leading, into the end of the Gear Case with the largest opening. Push the assembly into the Gear Case until the Spindle Front Bearing seats in the gear case bearing recess.
8. **For P, Q, S or U ratio,** if the Gear Head Planet Gear Bearings (53) were removed from the Gear Head Planet Gears (52), press new Bearings into the Gears using a needle bearing inserting tool. If any Gears are damaged, install a complete new set of Gears. Do not mix old Gears with new Gears in the same motor.
9. **For P, Q, S or U ratio,** support the web at the spline shaft end of the Gear Head (51) on the table of an arbor press and position a Gear Head Planet Gear with a Bearing in the web. The holes in the webs of the Gear Head are tapered and smaller toward the spline shaft end of the Gear Head. Press a Gear Head Planet Gear Shaft (54) through the rear web and Bearing into the front web until the Shaft is flush with the face of the rear web.
10. **For P ratio,** insert the Rotor Pinion (55) into the center of the Gear Head. This must be done before installing the second Gear in the Gear Head. It cannot be installed after a second Gear is secured in position.
11. **For P, Q, S or U ratio,** repeat Step 9 with the remaining Gear Head Planet Gear and Bearing.
12. **For P, Q, S or U ratio,** stand and support the assembled Gear Head on the table of an arbor press with the spline shaft end downward and press the Gear Head Bearing (56) onto the hub of the Gear Head.
13. **For P, Q, S or U ratio,** apply lubricant to the gear head gearing and while engaging the spline of the Gear Head with the gearing of the Spindle and Internal Gear, slide the assembled Gear Head into the Gear Case.

Assembly of the Motor

1. Push the Rear End Plate (15), flat face leading, onto the short hub of the Rotor (17).
2. Push the Rear Rotor Bearing (14) onto the short hub of the Rotor into the recess of the Rear End Plate and install the Rear Rotor Bearing Retainer (13) in the groove on the shaft of the Rotor to retain the Bearing and End Plate.
3. Place a Vane (18) in each vane slot in the Rotor and place the Cylinder (19) down over the Rotor and Vanes and against the Rear End Plate. Make certain the holes in the Cylinder and End Plate can be aligned. If they don't align, invert the Cylinder.
4. Press the Front Rotor Bearing (21) into the bearing recess of the Front End Plate (20).
5. Press the Front Rotor Bearing, Front End Plate leading, onto the spline end of the rotor shaft until the End Plate contacts the Cylinder.
6. Use a 1/8" rod approximately 12" long to align the cylinder dowel holes in the Front End Plate, Cylinder and Rear End Plate. Insert the end of the rod at the Rear End Plate end into the dowel hole in the Motor Housing. Slide the assembled motor along the rod into the Motor Housing until it stops against the bottom of the motor bore.
7. Remove the assembly rod and install the Cylinder Dowel (16) in its place.
8. Install the two Motor Retaining Washers (22), the concave face of both Washers trailing, over the hub of the Front End Plate.
9. **For D, K, M or N ratio,** install the Motor Spacer (30) over the rotor shaft and into the Motor Housing against the Motor Retaining Washers.
10. Install the assembled Gear Case against the Motor Housing. It may be necessary to rotate the Spindle by hand to properly engage the gearing with the spline on the Rotor.
11. Secure the Gear Case to the Motor Housing with the three Gear Case Cap Screws (11) and Lock Washers (12).
12. **For Models with Piped–Away Exhaust,** install new Exhaust Deflector Seals (6 and 7) in the internal grooves at each end of the Exhaust Deflector (5).
13. Slide the Muffler (8) over the rear of the Motor Housing until it stops against the body of the Housing.
14. Slide the Exhaust Deflector over the rear of the Motor Housing and Muffler until it stops against the forward Exhaust Deflector Retaining Ring (9).

15. Position the Backhead Gasket (3) against the rear face of the Motor Housing.
    For Series 4800 Non–reversible Motors, position the Gasket to block off the holes in the quadrant marked with an “R” if forward rotation is desired, or to block off the holes in the quadrant with an “F” if reverse rotation is desired.
    For Series 4840 Reversible Motors, position the Gasket so that each gasket inlet port aligns with a group of three holes through the housing rear wall.
16. Place the Backhead against the against the Gasket. Install the three Backhead Cap Screws (11) and Lock Washers (12) to secure the Backhead and Exhaust Deflector to the Motor Housing.
17. Install one Air Strainer (1) for non–reversible models and two Air Strainers for reversible models in the Backhead (2).

NOTICE

SAVE THESE INSTRUCTIONS. DO NOT DESTROY.