US-LT31PB-05 PISTOL-TYPE SCREWDRIVER

EXPLODED VIEW

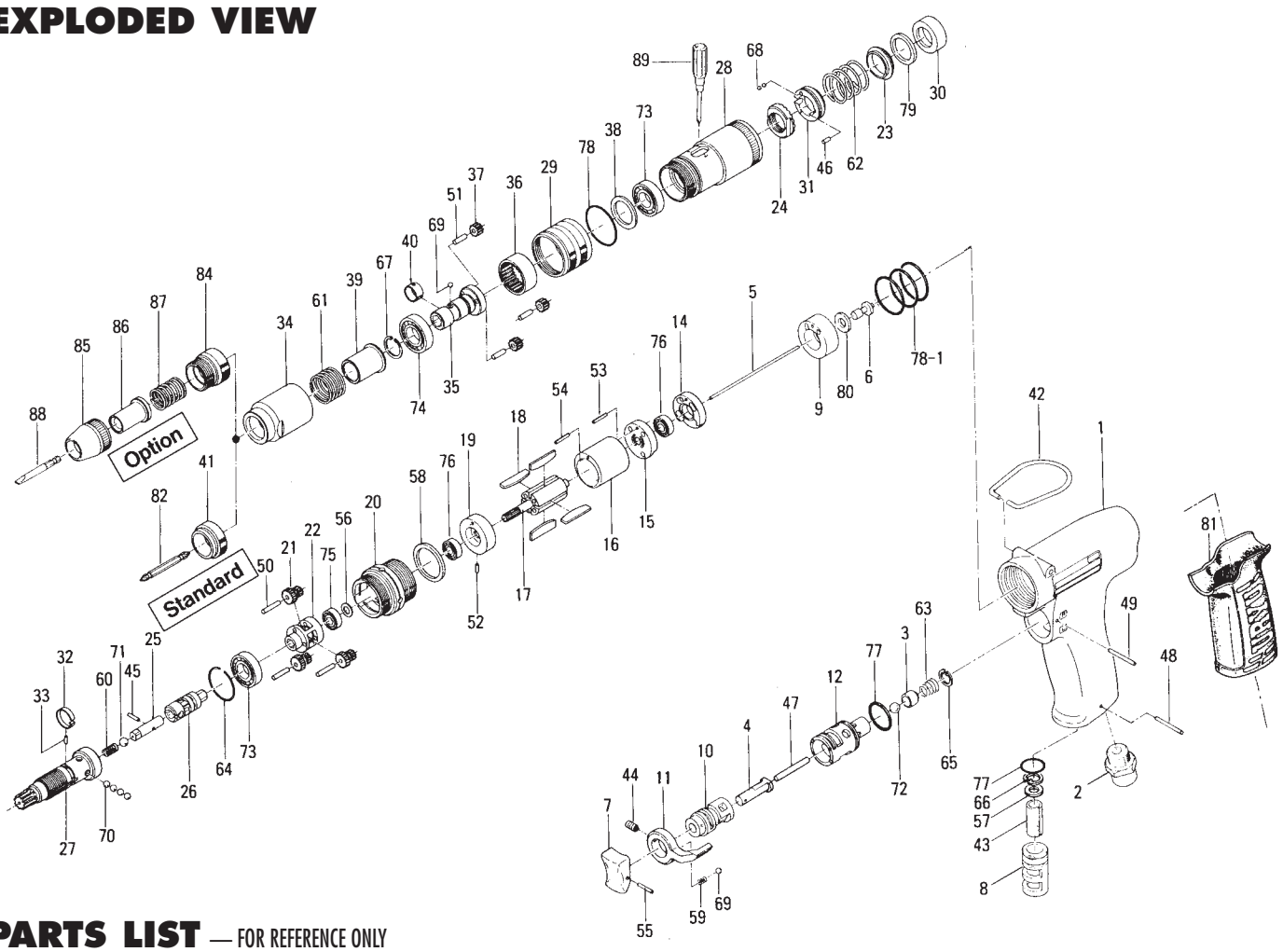

PARTS LIST — FOR REFERENCE ONLY

Index Number	Part Number	Description	Qty.
1	442-025-5	Casing	1
2	480-091-8	Air Inlet Bushing	1
3	480-100-9	Valve	1
4	443-103-5	Valve Rod Bushing	1
5	442-104-4	Valve Hod	1
6	443-254-5	Shut-Off Valve	1
7	177-107-5	Valve Lever	1
8	480-780-8	Silencer	1
9	442-282-5	Shut-Off Valve Bushing	1
10	480-210-9	Reverse Valve	1
11	480-212-8	Reverse Lever	1
12	480-211-9	Reverse Valve Bushing	1
14	442-291-4	Rear Plate Spacer	1
15	471-285-7	Rear Plate	1
16	442-286-4	Cylinder	1
17	471-287-5	Rotor	1
18	471-288-0	Blade (PC)	4
19	471-289-7	Front Plate	1
20	462-030-9	First Gear Casing	1
21	471-470-5	First Planet Gear	3
22	471-480-5	Gear Cage	1
23	471-164-8	Spring Holder	1
24	471-257-7	Adjusting Screw	1
25	471-318-5	Pilot Pin	1
26	471-346-5	Cam	1
27	462-654-9	Cam Guide	1
28	462-369-9	Clutch Casing	1
29	462-370-9	Clutch Casing Sleeve	1
30	471-375-8	Cam Ring	1
31	471-562-7	Retainer	1
32	471-670-7	Band	1
33	471-764-7	Notch Pin	1

Index Number	Part Number	Description	Qty.
34	462-029-9	Gear Casing	1
35	462-319-9	Anvil	1
36	462-466-9	Second Internal Gear	1
37	462-471-9	Second Planet Gear	3
38	462-487-9	Second Gear Cage Spacer	1
39	471-351-6	Bit Sleeve	1
40	471-356-7	Bit Band	1
41	471-567-6	Bushing	1
42	010-790-1	Suspension Ring	1
43	442-835-4	Filter	1
44	952-106-0	Allen Head Dog Point Screw (M4 x 6)	1
45	969-470-0	Pin (E) (2 x 8)	1
46	970-091-0	Pin (2 x 4.5)	1
47	970-228-0	Pin (3 x 28)	1
48	971-122-0	Pin (2 x 22)	1
49	971-123-0	Pin (2 x 23)	1
50	972-036-0	Roller Pin (2.5 x 15.8A)	3
51	972-090-0	Roller Pin (3 x 10)	3
52	973-001-0	Roll Pin (1.5 x 6)	1
53	973-002-0	Roll Pin (1.5 x 15)	1
54	973-003-0	Roll Pin (1.5 x 8)	2
55	973-012-0	Roll Pin (2 x 12)	1
56	975-009-0	Spacer (9 x 5.2 x 0.3)	1
57	975-026-0	Spacer (11 x 3.9 x 2)	1
58	975-188-0	Spacer (26 x 20 x 1.5)	1
59	976-006-0	Spring (3 x 5 (0.4))	1
60	976-058-0	Spring (4 5 x 11(0.41))	1
61	976-450-0	Spring (18.5 x 10 (10))	1
62	976-493-0	Spring (20.8 x 22) (2.0) (Red-Standard)	1
63	977-150-0	Cone Spring (6.8 x 8.5 x 8(0.4))	1
646	978-229-0	Snap Ring (23 x 1)	1
65	979-002-0	Inner Snap Ring (9)	1

Index Number	Part Number	Description	Qty.
66	979-004-0	Inner Snap Ring (11)	1
67	979-353-0	Inner Snap Ring (ISTW-12)	1
68	981-001-0	Ball (3/32)	2
69	981-002-0	Ball (1/8)	2
70	981-003-0	Ball (5/32)	4
71	981-004-0	Ball (3/16)	1
72	981-206-0	Ball (1/4)	1
73	982-901-0	Ball Bearing (6900)	2
74	982-902-0	Ball Bearing (6901)	1
75	987-013-0	Miniature Ball Bearing (R-1350)	1
76	987-041-0	Miniature Ball Bearing (1350ZZ)	2
77	990-912-0	C-Ring (SNS-14)	2
78	990-919-0	O-Ring (SNS-22)	1
78-1	990-917-0	O-Ring (SNS-24)	3
79	944-016-0	Back-up Ring (P16)	1
80	996-411-0	Packing (11 x 6 x 1)	1
89	939-402-0	Manual Driver No.2 (Ø5)	1
90	976-471-0	Spring (19.4 x 22 (1.6)) (Pink-Weak)	1

ACCESSORIES

82	916-810-0	Double-end Bit No.2 x 75 (6.335H)	1

Accessories for Slotted Head Bit & Finder

81	174-842-8	Handle Jacket	1	
84	471-082-7	Bit Casing Set Screw	1	■
85	471-057-7	Bit Casing	1	■
86	917-350-0	Finder	1	■
87	976-330-0	Spring (13.8 x 18 (0.8))	1	■
88	916-030-0	(-) Bit (5 x 56) (6.35H)	1	■

FOOTNOTES

■ = For slotted head bit and finder, take out #41 471-567-6 Bushing and use the these parts

AIMCO also offers a complete line of standard & special adapters, bits, sockets and extensions.

When ordering spare parts, please specify tool type, part number and description.

AIMCO
10000 SE PINE, PORTLAND, OR 97216
503-254-6600 FAX 503-255-2615

REVISED 4/00