UAN-611R-60C TORQUE CONTROL ANGLE NUTRUNNERS

EXPLODED VIEW

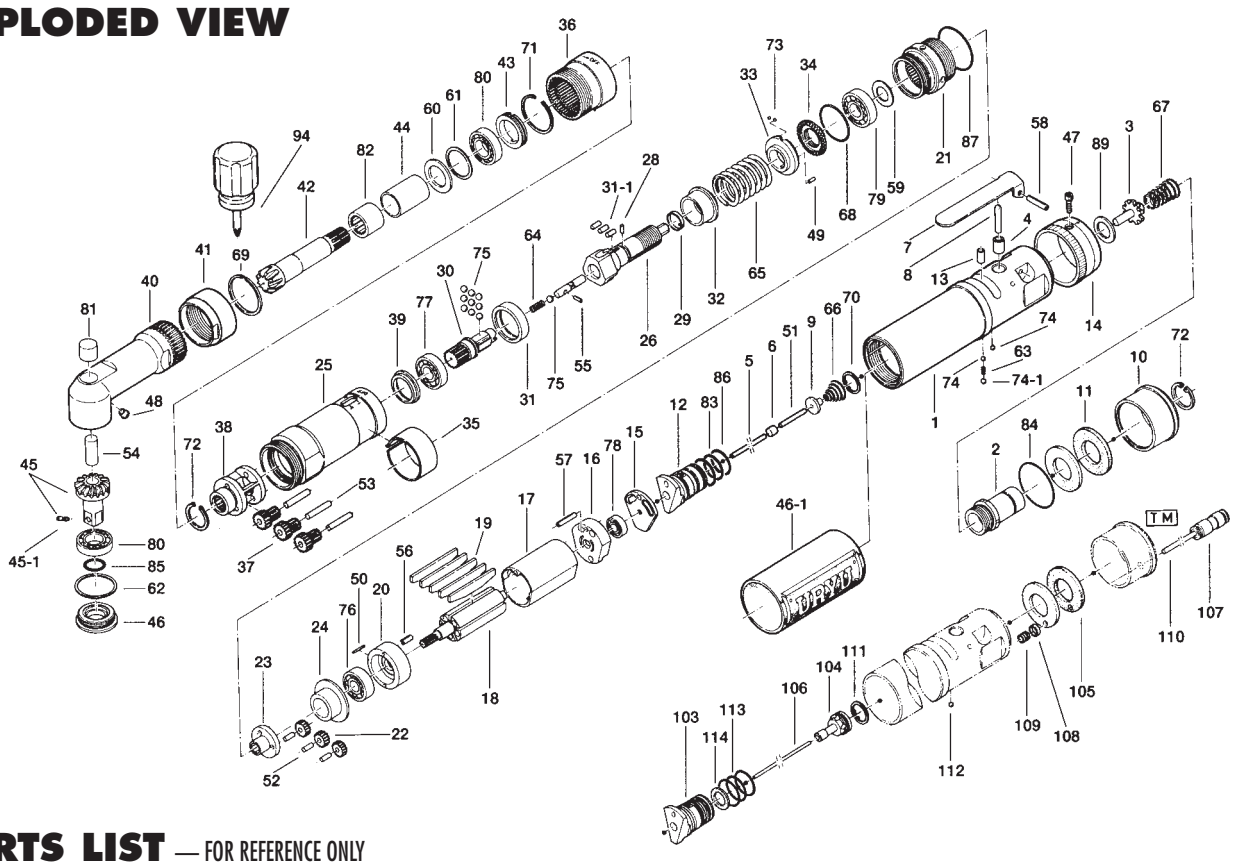

PARTS LIST — FOR REFERENCE ONLY

Index Number	Part Number	Description	Qty.
1	268-025-7	Handle	1
2	259-091-6	Air Inlet Bushing	1
3	259-100-6	Valve	1
4	553-103-1	Valve Rod Bushing	1
5	268-104-6	Valve Rod	1
6	444-106-8	Valve Rod Cap	1
7	196-107-7	Valve Lever	1
8	259-114-0	Valve Spindle	1
9	259-254-6	Shut-Off Valve	1
10	259-780-6	Exhaust Stack	1
11	259-835-6	Filter	2
12	268-210-7	Reverse Valve	1
13	268-211-6	Reverse Valve Bushing	1
14	268-212-6	Reverse Lever	1
15	268-291-7	Rear Plate Spacer	1
16	259-285-0	Rear Plate	1
17	259-286-0	Cylinder	1
18	259-287-0	Rotor	1
19	268-288-6	Blade (PC)	1
20	496-289-1	Front Plate	1
21	463-029-8	Gear Casing	1
22	472-470-3	Planet Gear	3
23	472-480-3	Gear Cage	1
24	472-807-3	Spacer	1
25	268-369-6	Clutch Casing	1
26	268-654-6	Cam Guide	1
27	268-318-6	Pilot Pin	1
28	471-764-7	Notch Pin	1
29	471-670-7	Band (Small)	1
30	268-346-9	Cam	1
31	259-375-0	Cam Ring	1
31-1	268-651-6	Cam Roller	3
32	268-164-7	Spring Holder	1
33	895-064-1	Spring Retainer	1
34	472-257-8	Regulating Screw	1
35	259-670-0	Band (Large)	1

Index Number	Part Number	Description	Qty.
36	259-466-0	Internal Gear	1
37	268-471-9	Second Planet Gear	3
38	268-485-9	Second Gear Cage	1
39	268-487-9	Second Gear Cage Spacer	1
40	268-441-6	Angle Casing	1
41	259-081-0	Locking Nut	1
42	259-420-2	Driving Gear	1
43	259-426-0	Driving Gear Spindle Screw	1
44	259-567-2	Bushing	1
45	895-046-1	Driven Gear Assembly (P)	1
45-1	891-300-1	Socket Retainer Pin Assembly	1
46	268-488-6	Angle Casing Cover	1
46-1	268-840-6	Handle Protector	1
47	945-001-0	Allen Head Bolt (M3 X 10)	1
48	968-130-0	Grease Cup (3/16)	1
49	970-092-0	Pin (H) (2 X 5.5)	1
50	971-110-0	Pin (2 X 10)	1
51	972-020-0	Roller Pin (2 X 19.8A)	1
52	972-089-0	Roller Pin (3 X 8)	3
53	972-106-0	Roller Pin (3.5 X 21.8A)	3
54	972-320-0	Roller Pin (8 X 20)	1
55	969-470-0	Pin (H) (2 X 8)	1
56	973-108-0	Roll Pin (3 X 8)	1
57	973-116-0	Roll Pin (3 X 16)	1
58	973-124-0	Roll Pin (3 X 24)	1
59	975-106-0	Spacer (18.5 X 11 X 1)	1
60	975-166-0	Spacer (24 X 16 X 1.5)	1
61	975-806-0	Adjusting Spacer (24 X 20 X T)	1
62	975-807-0	Adjusting Spacer (28 X 25 X T)	1
63	976-022-0	Spring (3 X 5.5 X 0.4)	1
64	976-058-0	Spring (4.5 X 11 X 0.4)	1
65	976-596-0	Spring (25.2 X 32.5 X 3.0)	1
66	977-072-0	Cone Spring (5.5 X 15 X 14)	1
67	977-275-0	Cone Spring (11 X 14 X 32)	1
68	978-278-0	Snap Ring (28 X 1)	1
69	978-308-0	Snap Ring (30 X 1.6)	1

Index Number	Part Number	Description	Qty.	
70	979-009-0	Outer Snap Ring (16)	1	
71	979-206-0	Snap Ring (28)	1	
72	979-358-0	Inner Snap Ring (ISTW-1 7)	2	
73	981-001-0	Ball (3/32)	2	
74	981-002-0	Ball (1/8)	2	
74-1	981-003-0	Ball (5/32)	1	
75	981-004-0	Ball (3/16)	10	
76	982-015-0	Ball Bearing (608)	1	
77	982-903-0	Ball Bearing (6902)	1	
78	982-033-0	Ball Bearing (696)	1	
79	982-100-0	Ball Bearing (6000)	1	
80	982-902-0	Ball Bearing (6901)	1	
81	988-480-0	Needle Roller Bearing (BK0810)	1	
82	988-393-0	Needle Roller Bearing (NF-1416)	1	
83	990-590-0	O-Ring (17X1)	2	
84	990-603-0	O-Ring (28.5 X 1.3)	1	
85	990-910-0	O-Ring (SNS-12.5)	1	
86	990-914-0	O-Ring (SNS-16)	1	
87	990-924-0	O-Ring (SNS-30)	1	
89	996-433-0	Urethane Packing (19 X 12 X 1)	1	
103	895-070-1	Reverse Valve	1	■
104	895-071-1	Shut-Off Valve	1	■
105	895-072-1	Filter	1	■
106	895-073-1	Valve Rod	1	■
107	933-250-0	One-Touch Connector (SLS-04)	1	■
108	933-500-0	Chucking Ring (04)	1	■
109	933-501-0	Chucking Guide (04)	1	■
110	935-350-0	Super Flex Tube (F-1 504)	1	■
111	979-008-0	Outer Snap Ring (15)	1	■
114	996-422-0	Urethane Packing (16 X 10 X 1)	1	■

ACCESSORIES

94	939-402-0	Manual Driver No.2	1

FOOTNOTES

■ = Parts for TM Type

AIMCO also offers a complete line of standard & special adapters, bits, sockets and extensions.

When ordering spare parts, please specify tool type, part number and description.

AIMCO
10000 SE PINE, PORTLAND, OR 97216
503-254-6600 FAX 503-255-2615

REVISED 8/00