UX-612S, 612SD OIL-PULSE TOOLS

EXPLODED VIEW

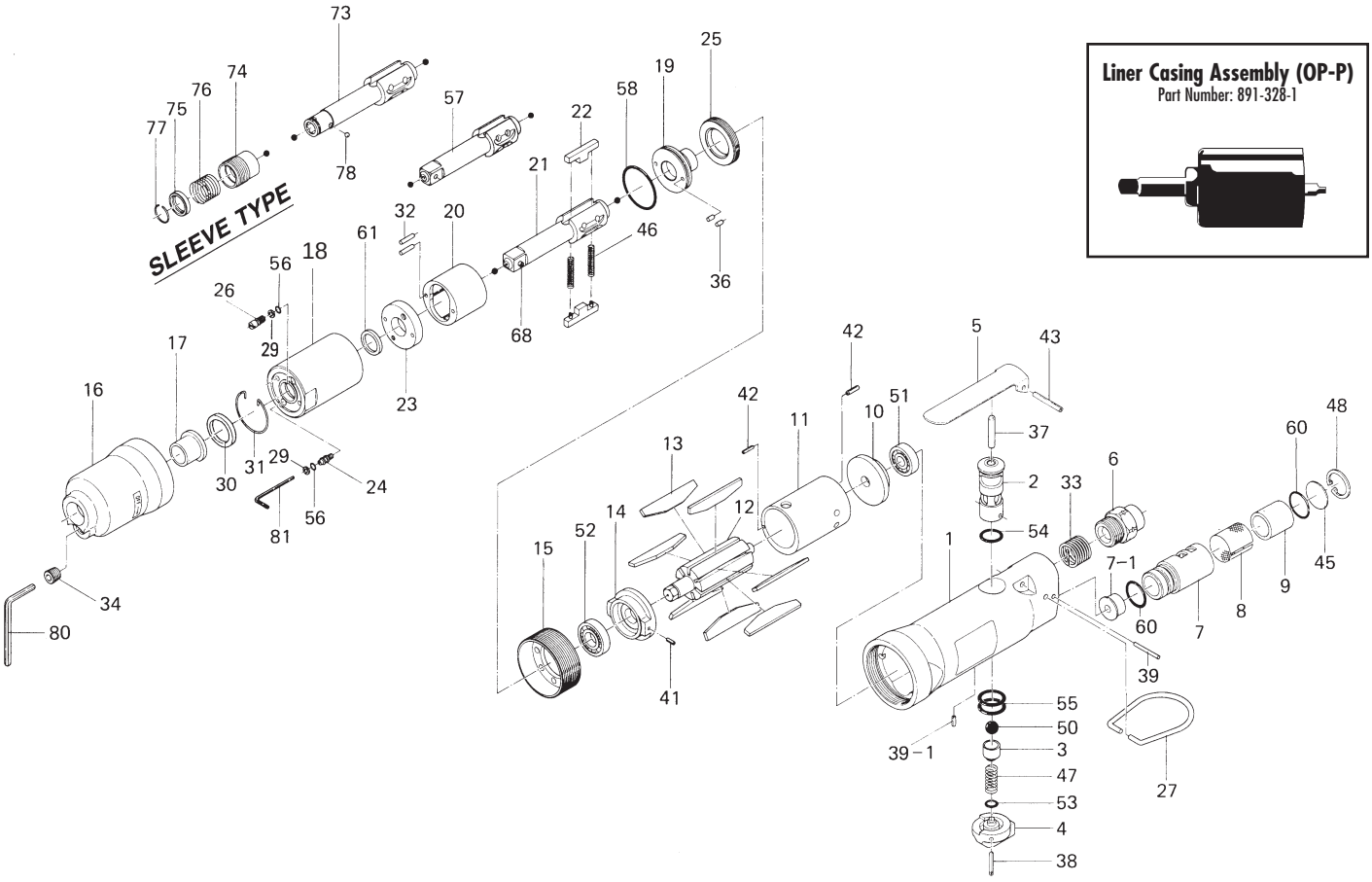

PARTS LIST — FOR REFERENCE ONLY

Index Number	Part Number	Description	Qty.
1	179-025-0	Casing	1
2	180-210-2	Reverse Valve	1
3	180-100-2	Valve	1
4	180-212-2	Reverse Lever	1
5	500-107-1	Valve Lever	1
6	180-091-6	Air Inlet Bushing	1
7	194-780-4	Exhaust Stack	1
7-1	190-781-6	Exhaust Stack Bushing	1
8	194-042-4	Silencer	1
9	611-780-7	Filter	1
10	180-285-2	Rear Plate	1
11	180-286-2	Cylinder	1
12	196-287-4	Rotor	1
13	150-288-9	Rotor Blade (PC)	7
14	182-289-2	Front Plate	1
15	177-036-5	Hammer Casing Connector	1
16	178-439-8	Front Casing	1
17	190-328-6	Anvil Bushing	1
18	178-905-9	Liner Casing	1
19	196-901-4	Rear Liner Plate	1
20	190-902-6	Liner	1
22	190-440-6	Driving Blade	2
23	178-904-8	Front Liner Plate	1
24	174-907-8	Relief Valve Spindle	1
25	190-906-6	Liner Casing Cover	1
26	178-742-0	Oil Plug	1

Index Number	Part Number	Description	Qty.
27	010-790-1	Suspension Ring	1
29	944-002-0	Supporting Ring (2.6 x 4.5 x 1)	2
30	178-327-9	Anvil Front Spacer	1
31	978-282-0	Snap Ring (28 x 1.0)	1
32	970-135-0	Pin (H) (2.45 x 11)	2
33	965-073-0	Heli-Sert (UNF5/8 x N6)	1
34	966-110-0	Allen Head Plug (NPT 1/16)	1
36	970-130-0	Pin (H) (2.45 x 4.5)	2
37	970-326-0	Pin (H) (4 x 25)	1
38	973-022-0	Roll Pin (2 x 22)	1
39	971-163-0	Pin (2.5 x 23)	1
39-1	973-005-0	Roll Pin (2 x 5)	1
41	973-006-0	Roll Pin (2 x 6)	1
42	973-008-0	Roll Pin (2 x 8)	2
43	973-124-0	Roll Pin (3 x 24)	1
45	975-598-0	Round Plate (18 x 1)	1
46	976-791-0	Spring (3.3 x 21) (0.4)	2
47	976-147-0	Spring (7 x 12)	1
48	979-011-0	Inner Snap Ring (18)	1
50	981-208-0	Ball (5/16)	1
51	982-401-0	Ball Bearing (EE-2)	1
52	982-402-0	Ball Bearing (EE-3)	1
53	990-322-0	O-Ring (ARP-568-107)	1
54	990-008-0	O-Ring (P10)	1
55	990-014-0	O-Ring (P14)	2
56	990-320-0	O-Ring (ARP-568-003)	2

Index Number	Part Number	Description	Qty.	
57	178-319-8	Anvil (OP-O)	1	
58	990-329-0	O-Ring (JW1S30-19)	1	
60	990-914-0	O-Ring (SNS-16)	2	
61	995-512-0	Teflon Seal (P12)	1	
21	891-316-1	Anvil (OP-P)	1	■
68	891-300-1	Socket Retainer Pin Assembly	1	■
73	178-350-0	Driver Anvil	1	❍
74	011-351-1	Bit Sleeve	1	❍
75	011-352-1	Bit Spacer	1	❍
76	976-327-0	Spring (13.5 x 11)	1	❍
77	978-117-0	Snap Ring (11.7 x 1.0)	1	❍
78	981-002-0	Ball (1/8)	1	❍
ACCESSORIES				
80	939-105-0	Allen Wrench (4mm)	1	
81	939-091-0	Allen Wrench (1.5mm) (80 x 20)	1	

FOOTNOTES

❍ = Parts for UX-612S
■ = Parts for UX-612SD

AIMCO also offers a complete line of standard & special adapters, bits, sockets and extensions.

When ordering spare parts, please specify tool type, part number and description.

AIMCO
10000 SE PINE, PORTLAND, OR 97216
503-254-6600 FAX 503-255-2615

REVISED 4/00