# UX-T900 OIL-PULSE TOOLS

## EXPLODED VIEW

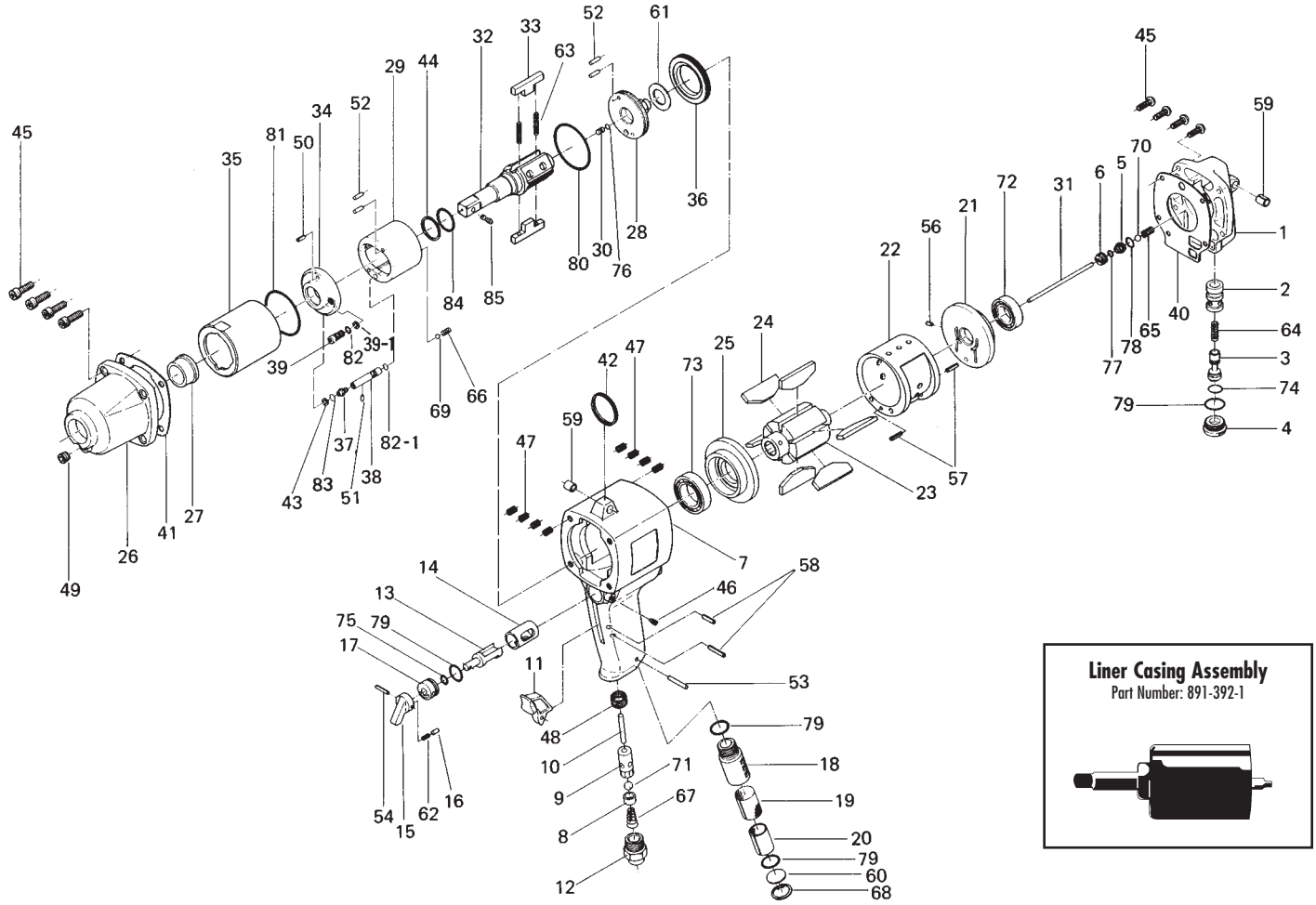


**Liner Casing Assembly**
Part Number: 891-392-1



## PARTS LIST — FOR REFERENCE ONLY

| Index Number | Part Number | Description | Qty. | |
|---|---|---|---|---|
| 1 | 168-012-4 | Head Cover | 1 | |
| 2 | 175-253-7 | Shut-Off Valve Bushing | 1 | |
| 3 | 175-254-7 | Shut-Off Valve | 1 | |
| 4 | 175-927-9 | Shut-Off Valve Cover | 1 | |
| 5 | 175-968-9 | Pilot Valve Retainer | 1 | |
| 6 | 175-019-9 | Valve Cover | 1 | |
| 7 | 168-025-4 | Handle | 1 | ❍ |
| 8 | 188-100-1 | Valve | 1 | ❍ |
| 9 | 063-102-3 | Valve Bushing | 1 | ❍ |
| 10 | 193-104-6 | Valve Rod | 1 | ❍ |
| 11 | 187-107-1 | Throttle Trigger | 1 | ❍ |
| 12 | 185-091-7 | Air Inlet Bushing | 1 | ❍ |
| 13 | 187-210-1 | Reverse Valve | 1 | |
| 14 | 185-211-1 | Reverse Valve Bushing | 1 | |
| 15 | 023-212-4 | Reverse Lever | 1 | |
| 16 | 054-220-1 | Reverse Lever Notch | 1 | |
| 17 | 187-222-1 | Reverse Valve Setter | 1 | |
| 18 | 194-780-4 | Exhaust Stack | 1 | |
| 19 | 194-042-4 | Silencer | 1 | |
| 20 | 174-780-3 | Filter | 1 | |
| 21 | 194-285-3 | Rear Plate | 1 | |
| 22 | 194-286-3 | Cylinder | 1 | |
| 23 | 168-287-4 | Rotor | 1 | |
| 24 | 168-288-5 | Rotor Blade (GK) | 6 | |
| 25 | 194-289-3 | Front Plate | 1 | |
| 26 | 194-439-3 | Front Casing | 1 | |
| 27 | 188-328-2 | Anvil Bushing | 1 | |
| 28 | 168-901-4 | Rear Liner Plate | 1 | |
| 29 | 168-902-4 | Liner | 1 | |
| 30 | 175-546-9 | Piston | 1 | |
| 31 | 168-130-4 | Piston Rod | 1 | |

| Index Number | Part Number | Description | Qty. | |
|---|---|---|---|---|
| 32 | 891-311-1 | Anvil (OP-P) | 1 | |
| 33 | 194-440-3 | Driving Blade | 2 | |
| 34 | 168-904-4 | Front Liner Plate | 1 | |
| 35 | 194-905-3 | Liner Casing | 1 | |
| 36 | 194-906-3 | Liner Casing Setter | 1 | |
| 37 | 175-907-9 | Relief Valve Spindle | 1 | |
| 38 | 168-970-4 | Relief Valve | 1 | |
| 39 | 194-742-3 | Oil Plug | 1 | |
| 39-1 | 944-003-0 | Supporting Ring (3.0 x 5.0 x 1) | 1 | |
| 40 | 168-853-4 | Head Cover Packing | 1 | |
| 41 | 194-867-3 | Front Packing | 1 | |
| 42 | 004-790-2 | Suspension Ring | 1 | |
| 43 | 944-205-0 | Supporting Ring (5.1 x 7 x 1) | 1 | |
| 44 | 944-215-0 | Supporting Ring (16 x 19.9 x 1.5) | 1 | |
| 45 | 945-117-0 | Allen Head Bolt (M5 x 16) | 8 | |
| 46 | 952-108-0 | Allen Head Dog Point Screw (M4 x 8) | 1 | |
| 47 | 965-011-0 | Heli-Sert (M5 x 1.5D) | 8 | ❍ |
| 48 | 965-073-0 | Heli-Sert (UNF5/8) (N6) | 1 | ❍ |
| 49 | 966-100-0 | Allen Head Plug (1/8) | 1 | |
| 50 | 969-450-0 | Pin (G) (3 x 8) | 1 | |
| 51 | 970-093-0 | Pin (H) (2 x 6) | 1 | |
| 52 | 970-206-0 | Pin (H) (3 x 8) | 4 | |
| 53 | 971-163-0 | Pin (2.5 x 23) | 1 | |
| 54 | 973-016-0 | Roll Pin (2 x 16) | 1 | |
| 56 | 973-066-0 | Roll Pin (2.5 x 6) | 1 | |
| 57 | 973-108-0 | Roll Pin (3 x 8) | 2 | |
| 58 | 973-114-0 | Roll Pin (3 x 14) | 2 | ❍ |
| 59 | 973-340-0 | Roll Pin (6 x 10) | 2 | |
| 60 | 975-598-0 | Round Plate (18 x 1) | 1 | |
| 61 | 975-780-0 | Adjusting Spacer (21 x 13 x T) | 1 | |
| 62 | 976-025-0 | Spring (3 x 8.5) | 1 | |

| Index Number | Part Number | Description | Qty. | |
|---|---|---|---|---|
| 63 | 976-794-0 | Spring (3.8 x 33) (0.5) | 2 | |
| 64 | 976-274-0 | Spring (5.2 x 15) | 1 | |
| 65 | 976-275-0 | Spring (6.7 x 12) | 1 | |
| 66 | 977-013-0 | Cone Spring (3.2 x 3.8 x 7) (0.55) | 1 | |
| 67 | 977-175-0 | Cone Spring (7.5 x 10.3 x 22) | 1 | ❍ |
| 68 | 979-011-0 | Inner Snap Ring (18) | 1 | |
| 69 | 981-002-0 | Ball(1/8) | 1 | |
| 70 | 981-006-0 | Ball (1/4) | 1 | |
| 71 | 981-208-0 | Ball (5/16) (BLACK) | 1 | ❍ |
| 72 | 982-403-0 | Ball Bearing (EE-4) | 1 | |
| 73 | 982-950-0 | Ball Bearing (16002) | 1 | |
| 74 | 990-004-0 | O-Ring (P6) | 1 | |
| 75 | 990-205-0 | O-Ring (JW1516-5) | 1 | |
| 76 | 990-320-0 | O-Ring (APR568-003) | 1 | |
| 77 | 990-901-0 | O-Ring (SNS-3) | 1 | |
| 78 | 990-907-0 | O-Ring (SNS-9) | 1 | |
| 79 | 990-914-0 | O-Ring (SNS-16) | 4 | |
| 80 | 990-607-0 | O-Ring (34 x 2.3) | 1 | |
| 81 | 990-338-0 | O-Ring (JW1530-28) | 1 | |
| 82 | 990-970-0 | O-Ring (SNS-2) (NOK) | 1 | |
| 83 | 990-972-0 | O-Ring (SNS-4) (NOK) | 1 | |
| 84 | 995-516-0 | Teflon Seal (P16GC) | 1 | |
| 85 | 891-304-1 | Socket Pin Assembly (1/2) | 1 | |
| 82-1 | 990-970-0 | O-Ring (SNS-2) (NOK) | 1 | |

### ACCESSORIES

| | | | |
|---|---|---|---|
| 88 | 939-104-0 | Allen Wrench (5mm) | 1 |
| 89 | 939-109-0 | Allen Wrench (2mm) (64 x 64) | 1 |

**FOOTNOTES**

❍ = 168-004-4 Handle Assembly Components

AIMCO also offers a complete line of standard & special adapters, bits, sockets and extensions.

**When ordering spare parts, please specify tool type, part number and description.**


AIMCO
10000 SE PINE, PORTLAND, OR 97216
503-254-6600 FAX 503-255-2615