UX-T1000 OIL-PULSE TOOLS [TORQUE CONTROL]

EXPLODED VIEW

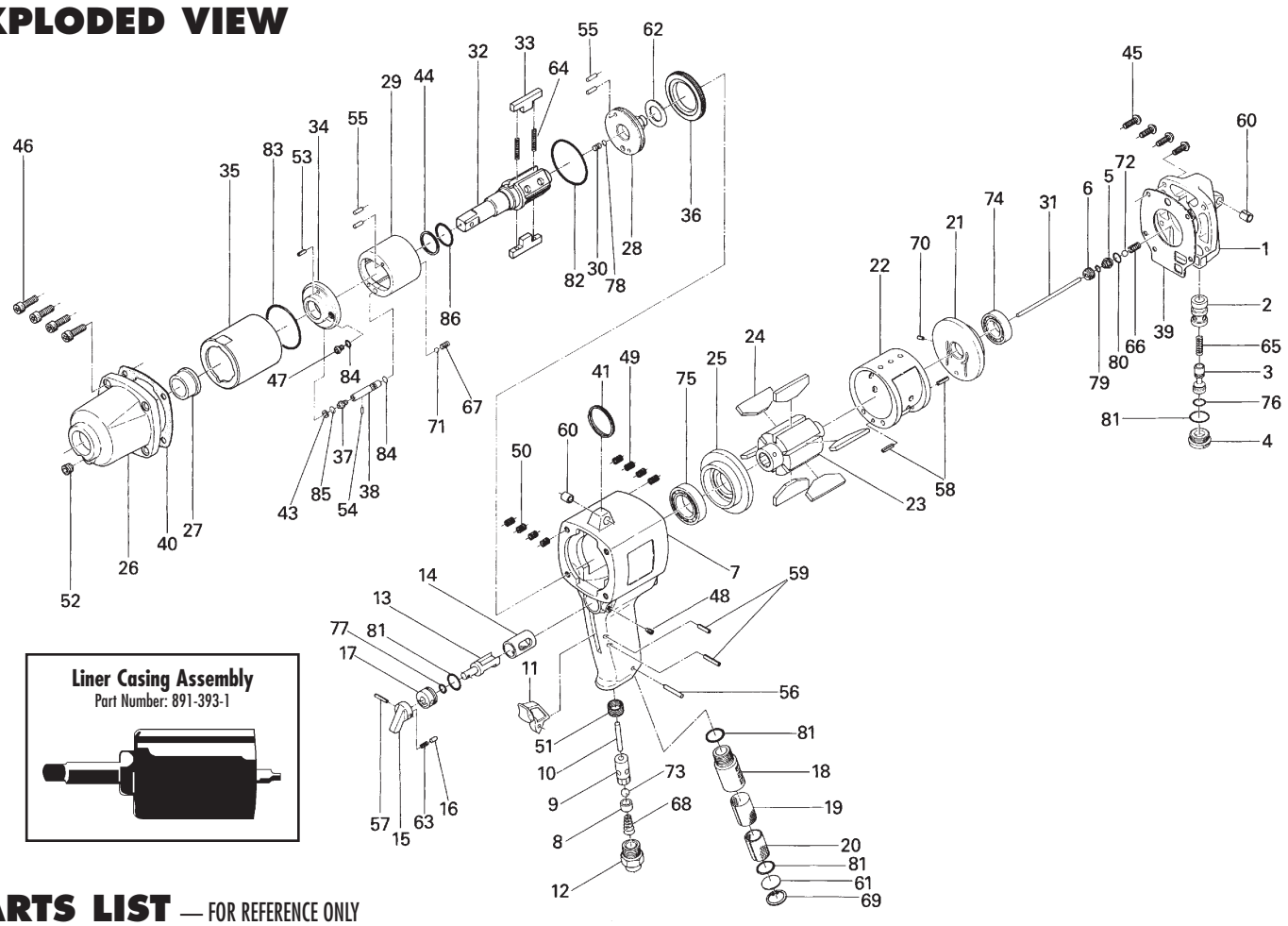

PARTS LIST — FOR REFERENCE ONLY

Index Number	Part Number	Description	Qty.	
1	175-012-7	Head Cover	1	
2	175-253-7	Shut-Off Valve Bushing	1	
3	175-254-7	Shut-Off Valve	1	
4	175-927-9	Shut-Off Valve Cover	1	
5	175-968-9	Pilot Valve Retainer	1	
6	175-019-9	Valve Cover	1	
7	175-025-7	Handle	1	●
8	188-100-1	Valve	1	●
9	063-102-3	Valve Bushing	1	●
10	193-104-6	Valve Rod	1	●
11	026-107-7	Throttle Trigger	1	●
12	185-091-7	Air Inlet Bushing	1	●
13	199-210-1	Reverse Valve	1	
14	199-211-1	Reverse Valve Bushing	1	
15	023-212-4	Reverse Lever	1	
16	054-220-1	Reverse Lever Notch	1	
17	187-222-1	Reverse Valve Setter	1	
18	194-780-4	Exhaust Stack	1	
19	194-042-4	Silencer	1	
20	194-835-4	Filter	1	
21	041-285-7	Rear Plate	1	
22	188-286-9	Cylinder	1	
23	175-287-7	Rotor	1	
24	175-288-9	Blade (PC)	6	
25	194-289-4	Front Plate	1	
26	194-439-4	Front Casing	1	
27	189-328-8	Anvil Bushing	1	
28	175-901-7	Rear Liner Plate	1	
29	175-902-7	Liner	1	
30	175-546-9	Piston	1	
31	175-130-7	Piston Rod	1	

Index Number	Part Number	Description	Qty.	
32	891-312-1	Anvil (OP-P)	1	
33	194-440-4	Driving Blade	2	
34	175-904-7	Front Liner Plate	1	
35	194-905-4	Liner Casing	1	
36	194-906-4	Liner Casing Setter	1	
37	175-907-9	Relief Valve Spindle	1	
38	175-970-8	Relief Valve	1	
39	175-853-8	Head Packing	1	
40	194-867-4	Front Casing Packing	1	
41	004-790-2	Suspension Ring	1	
43	944-205-0	Back-up Ring (5.1 x 7 x 1)	1	
44	944-215-0	Supporting Ring (16 x 19.9 x 1.5)	1	
45	945-117-0	Allen Head Bolt (M5 x 16)	4	
46	945-216-0	Allen Head Bolt (M6 x 16)	4	
47	945-942-0	Hexagon Round Head Bolt (M4 x 6)	1	
48	952-108-0	Allen Head Dog Point Screw (M4 x 8)	1	
49	965-011-0	Heli-Sert (M5 x 1.5D)	4	●
50	965-021-0	Heli-Sert (M6 x 1.5D)	4	●
51	965-073-0	Heli-Sert (UNF5/8) (N6)	1	●
52	966-100-0	Allen Head Plug (1/8)	1	
53	969-450-0	Pin (G) (3 x 8)	1	
54	970-093-0	Pin (H) (2 x 6)	1	
55	970-206-0	Pin (H) (3 x 8)	4	
56	971-163-0	Pin (2.5 x 23)	1	
57	973-016-0	Roll Pin (2 x 16)	1	
58	973-108-0	Roll Pin (3 x 8)	2	
59	973-116-0	Roll Pin (3 x 16)	2	●
60	973-340-0	Roll Pin (6 x 10)	2	
61	975-598-0	Round Plate (18 x 1)	1	
62	975-780-0	Adjusting Spacer (21 x 13 x 5T)	1	
63	976-025-0	Spring (3 x 8.5)	1	

Index Number	Part Number	Description	Qty.	
64	976-453-0	Spring (4.5 x 34.5)	2	
65	976-274-0	Spring (5.2 x 15)	1	
66	976-275-0	Spring (6.7 x 12)	1	
67	977-011-0	Cone Spring (3.3 x 4.5 x 7.3)	1	
68	977-175-0	Cone Spring (7.5 x 10.3 x 22)	1	●
69	979-318-0	Inner Snap Ring (IRTW-18)	1	
70	980-008-0	Round Head Notch (2.4)	1	
71	981-155-0	Ball (3.5)	1	
72	981-006-0	Ball (1/4)	1	
73	981-208-0	Ball (5/16)	1	●
74	982-403-0	Ball Bearing (EE-4)	1	
75	982-951-0	Ball Bearing (16003)	1	
76	990-004-0	O-Ring (P-6)	1	
77	990-205-0	O Ring (JW1516-5)	1	
78	990-320-0	O Ring (APR 568-003)	1	
79	990-901-0	O Ring (SNS-3)	1	
80	990-907-0	O Ring (SNS-9)	1	
81	990-914-0	O Ring (SNS-16)	4	
82	990-930-0	O Ring (SNS-40)	1	
83	990-932-0	O Ring (SNS-42)	1	
84	990-971-0	O Ring (SNS-3) (NOK)	2	
85	990-972-0	O Ring (SNS-4) (NOK)	1	
86	995-516-0	Teflon Seal (P-16)	1	
91	891-304-1	Socket Pin Assembly (1/2)	1	

ACCESSORIES

Index Number	Part Number	Description	Qty.
97	939-104-0	Allen Wrench (5mm)	1
98	939-109-0	Allen Wrench (2mm)	1

AIMCO also offers a complete line of standard & special adapters, bits, sockets and extensions.

FOOTNOTES

● = 175-004-7 Handle Assembly Components

When ordering spare parts, please specify tool type, part number and description.

AIMCO
10000 SE PINE, PORTLAND, OR 97216
503-254-6600 FAX 503-255-2615

REVISED 4/00