UXR-3000S OIL-PULSE TOOLS

EXPLODED VIEW

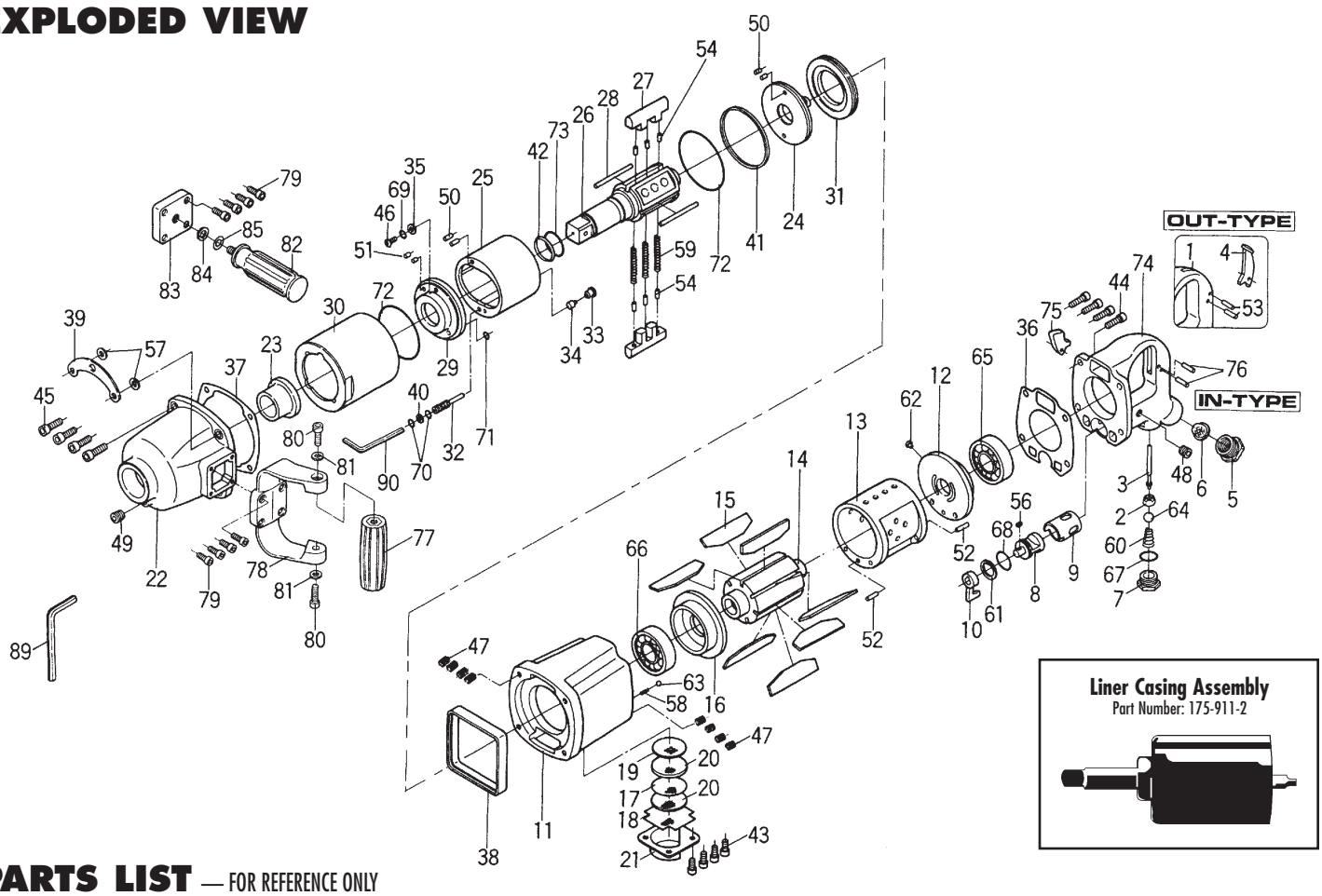

Liner Casing Assembly
Part Number: 175-911-2

PARTS LIST — FOR REFERENCE ONLY

Index Number	Part Number	Description	Qty.
1	175-010-2	Handle (Out)	1
2	116-100-0	Valve	1
3	116-104-0	Valve Rod	1
4	109-107-1	Valve Lever (Out)	1
5	518-091-6	Air Inlet Bushing	1
6	573-835-9	Filter	1
7	103-243-0	Regulator Cover	1
8	175-210-2	Reverse Valve	1
9	175-211-2	Reverse Valve Bushing	1
10	103-212-0	Reverse Lever	1
11	175-025-2	Casing	1
12	175-285-2	Rear Plate	1
13	175-286-2	Cylinder	1
14	175-287-2	Rotor	1
15	175-288-2	Blade	7
16	175-289-2	Front Plate	1
17	175-021-2	Exhaust Mesh Plate	1
18	175-042-2	Silencer	1
19	175-099-2	Punch Plate	1
20	175-835-2	Filter	2
21	175-782-2	Exhaust Cover	1
22	175-439-2	Front Casing	1
23	175-328-2	Anvil Bushing	1
24	175-901-2	Rear Liner Plate	1
25	175-902-2	Liner	1
26	175-319-2	Anvil	1
27	175-440-2	Driving Blade	2
28	175-974-2	Roller	2
29	175-904-2	Front Liner Plate	1
30	175-905-2	Liner Casing	1
31	175-906-2	Liner Casing Cover	1
32	175-907-2	Relief Valve Spindle	1
33	175-969-2	Relief Valve Plug	1
34	175-970-2	Relief Valve	1
35	188-807-1	Spacer	1
36	175-850-2	Handle Packing	1
37	175-867-2	Front Casing Packing	1
38	103-840-0	Casing Protector	1
39	175-794-2	Suspension Plate	1
40	944-005-0	Supporting Ring (4.2 x 6 x 1)	1
41	944-085-0	Supporting Ring (85 x 88 x 1)	1
42	944-230-0	Supporting Ring (33.9 x 39.6 x 1.5)	1
43	945-008-0	Allen Head Bolt (M4 x 8)	4
44	945-322-0	Allen Head Bolt (M8 x 22)	4
45	945-330-0	Allen Head Bolt (M8 x 30)	4
46	945-960-0	Hexagon Round Head Bolt (M6 x 8)	1
47	965-041-0	Heli-Sert (M8 x 1.5D)	8
48	966-100-0	Allen Head Plug (1/8)	1
49	966-101-0	Allen Head Plug (1/4)	1
50	970-508-0	Pin (H) (6 x 8)	4
51	969-465-0	Pin (G) (6 X 12)	2
52	973-214-0	Roll Pin (4 x 14)	2
53	973-222-0	Roll Pin (4 x 22)	2
54	973-308-0	Roll Pin (5 x 8)	6
56	974-008-0	Key (3 x 8)	1
57	975-051-0	Spacer (14 x 10 x 1)	2
58	976-076-0	Spring (5 x l9 x 0.6)	1
59	976-799-0	Spring (7.3 x 59 x 0.9)WPC	3
60	977-257-0	Cone Spring (10 x 15 x 25)	1
61	979-019-0	Inner Snap Ring (26)	1
62	980-009-0	Round Head Notch (4)	1
63	981-005-0	Ball (7/32)	1
64	981-032-0	Ball (7/16)	1
65	982-205-0	Ball Bearing (6205)	1
66	982-206-0	Ball Bearing (6206)	1
67	990-918-0	O-Ring (SNS 20)	1
68	990-919-0	O-Ring (SNS 22)	1
69	990-949-0	O-Ring (P3 NOK)	1
70	990-972-0	O-Ring (SNS4 NOK)	2
71	990-975-0	O-Ring (SNS8 NOK)	1
72	990-995-0	O-Ring (SNS80 NOK)	2
73	995-501-0	Teflon Seal (AR10400-P34GC)	1
74	175-010-3	Handle (In)	1
75	085-107-1	Valve Lever (In)	1
76	973-124-0	Roll Pin (3 x 24)	2
77	116-720-0	Supporting Handle	1
78	116-722-0	Supporting Handle Plate	1
79	945-114-0	Allen Head Bolt (M5 x l4)	4
80	945-318-0	Allen Head Bolt (M8 x 18)	2
81	961-014-0	Flat Washer (8)	2

ACCESSORIES

Index Number	Part Number	Description	Qty.
82	568-720-2	Dead Handle	1
83	855-020-1	Head Handle Plate	1
84	962-054-0	Spring Washer (2-1/2S)	1
85	975-127-0	Spacer (20 x 13 x 1)	1
89	939-007-0	Allen Wrench (6)	1
90	939-111-0	Allen Wrench (3)	1

AIMCO also offers a complete line of standard & special adapters, bits, sockets and extensions.

FOOTNOTES

When ordering spare parts, please specify tool type, part number and description.

AIMCO
10000 SE PINE, PORTLAND, OR 97216
503-254-6600 FAX 503-255-2615

REVISED 4/00