UXR-2400S OIL-PULSE TOOLS

EXPLODED VIEW

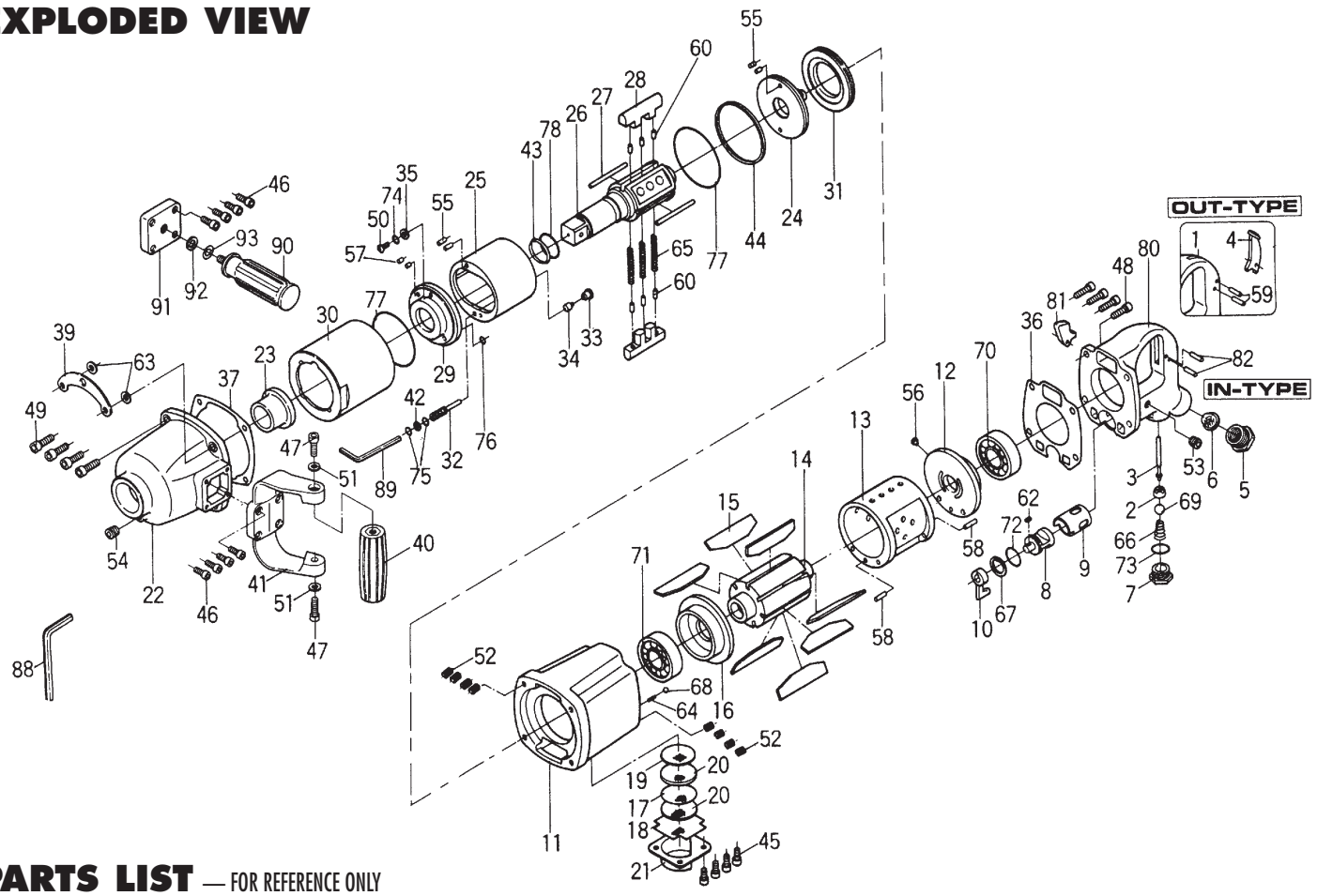

PARTS LIST — FOR REFERENCE ONLY

Index Number	Part Number	Description	Qty.
1	176-010-5	Handle (OUT)	1
2	116-100-0	Valve	1
3	116-104-0	Valve Rod	1
4	109-107-1	Valve Lever (OUT)	1
5	518-091-6	Air Inlet Bushing	1
6	573-835-9	Filter	1
7	103-243-0	Cover	1
8	176-210-5	Reverse Valve	1
9	176-211-5	Reverse Valve Bushing	1
10	103-212-0	Reverse Lever	1
11	176-025-5	Casing	1
12	176-285-5	Rear Plate	1
1 3	176-286-5	Cylinder	1
14	176-287-5	Rotor	1
15	176-288-5	Blade	7
16	176-289-5	Front Plate	1
17	175-021-2	Exhaust Plate	1
18	175-042-2	Silencer	1
19	175-099-2	Punch Plate	1
20	175-835-2	Filter	2
21	175-782-2	Exhaust Cover	1
22	176-439-5	Front Casing	1
23	176-328-5	Anvil Bushing	1
24	176-901-5	Rear Liner Plate	1
25	176-902-5	Liner	1
26	176-319-5	Anvil	1
27	176-974-5	Roller (4.4 x 55)	2
28	176-440-5	Driving Blade	2
29	176-904-5	Front Liner Plate	1
30	176-905-5	Liner Casing	1
31	176-906-5	Liner Casing Cover	1
32	194-907-8	Relief Valve Spindle	1

Index Number	Part Number	Description	Qty.
33	194-969-9	Relief Valve Plug	1
34	194-970-8	Relief Valve	1
35	188-807-1	Spacer	1
36	103-850-0	Handle Packing	1
37	176-867-5	Front Casing Packing	1
39	176-794-5	Suspension Plate	1
40	116-720-0	Dead Handle	1
41	116-722-0	Dead Handle Connector	1
42	944-005-0	Supporting Ring (4.2 x 6 x 1)	1
43	944-230-0	Supporting Ring (33.9 x 39.6 x 1.5)	1
44	944-077-0	Supporting Ring (77 x 80 x 1)	1
45	945-008-0	Allen Head Bolt (M4 x 8)	4
46	945-114-0	Allen Head Bolt (M5 x l4)	4
47	945-318-0	Allen Head Bolt (M8 x 18)	2
48	945-322-0	Allen Head Bolt (M8 x 22)	4
49	945-328-0	Allen Head Bolt (M8 x 28)	4
50	945-960-0	Hexagon Round Head Bolt (M6 x 8)	1
51	961-014-0	Flat Washer (8)	2
52	965-041-0	Heli-Sert (M8 x 1.5D)	8
53	966-100-0	Allen Head Plug (1/8)	1
54	966-101-0	Allen Head Plug (1/4)	2
55	970-508-0	Pin (H) (6 x 8)	4
56	973-108-0	Roll Pin (3 x 8)	1
57	969-465-0	Pin (G) (6 x 12)	2
58	973-214-0	Roll Pin (4 x 14)	2
59	973-222-0	Roll Pin (4 x 22)	2
60	973-308-0	Roll Pin (5 x 8)	6
62	974-008-0	Key (3 x 8)	1
63	975-051-0	Spacer (14 x 10 x 1)	2
64	976-076-0	Spring (5 x 19)	1
65	976-272-0	Spring (7.3 x 56)	3
66	977-257-0	Cone Spring (10 x 15 x 25)	1

Index Number	Part Number	Description	Qty.
67	979-015-0	Inner Snap Ring (22)	1
68	981-005-0	Ball (7/32)	1
69	981-032-0	Ball (7/1 6)	1
70	982-204-0	Ball Bearing (6204)	1
71	982-206-0	Ball Bearing (6206)	1
72	990-91 6-0	O-Ring (SNS-1 8)	1
73	990-918-0	O-Ring (SNS-20)	2
74	990-949-0	O-Ring (P3 NOK)	1
75	990-972-0	O-Ring (SNS-4 NOK)	2
76	990-975-0	O-Ring (SNS-8 NOK)	1
77	990-944-0	O-Ring (SNS-75)	2
78	995-501-0	Teflon Seal (AR10400-P34GC)	1
80	176-010-9	Handle (IN)	1
81	085-107-1	Valve Lever (IN)	1
82	973-124-0	Roll Pin (3 x 24)	1
ACCESSORIES			
88	939-007-0	Allen Wrench (6)	1
89	939-111-0	Allen Wrench (3) (125 x 60)	1
OPTIONAL ACCESSORIES			
90	568-720-2	Dead Handle (A)	1
91	855-020-1	Dead Handle Plate	1
92	962-054-0	Spring Washer (2-1/2S)	1
93	975-127-0	Spacer (20 x 13 x 1)	1

AIMCO also offers a complete line of standard & special adapters, bits, sockets and extensions.

FOOTNOTES

When ordering spare parts, please specify tool type, part number and description.

AIMCO
10000 SE PINE, PORTLAND, OR 97216
503-254-6600 FAX 503-255-2615

REVISED 6/98