UXR-1820 OIL-PULSE TOOLS

EXPLODED VIEW

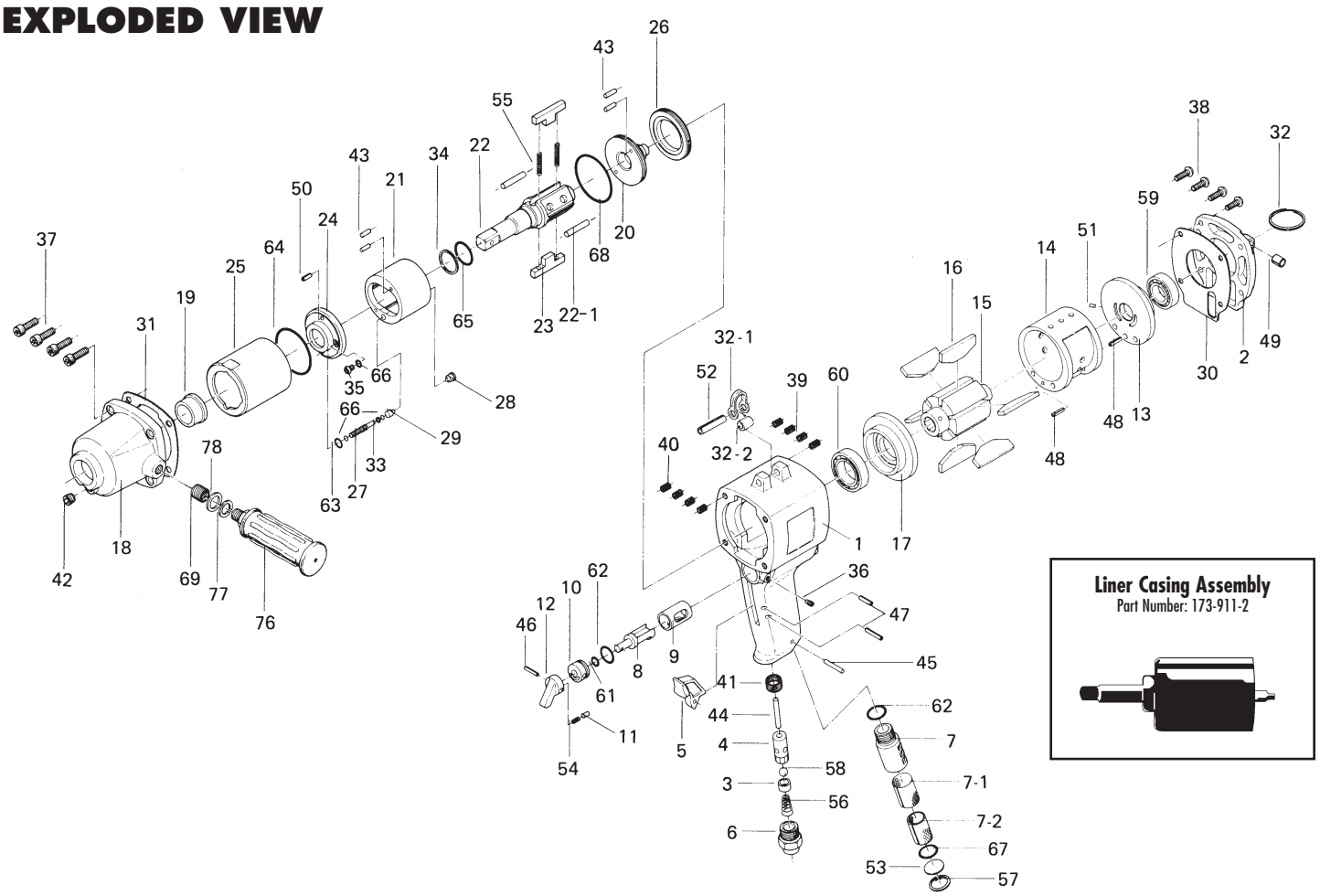

Liner Casing Assembly
Part Number: 173-911-2

PARTS LIST — FOR REFERENCE ONLY

Index Number	Part Number	Description	Qty.
1	195-025-9	Handle	1
2	195-012-9	Head Cover	1
3	188-100-1	Valve	1
4	063-102-3	Valve Bushing	1
5	026-107-7	Valve Lever	1
6	195-091-9	Air Inlet Bushing	1
7	195-780-9	Exhaust Stack	1
7-1	195-042-9	Silencer	1
7-2	195-835-9	Filter	1
8	189-210-8	Reverse Valve	1
9	189-211-8	Reverse Valve Bushing	1
10	187-222-1	Reverse Valve Setter	1
11	054-220-1	Reverse Lever Notch	1
12	023-212-4	Reverse Lever	1
13	195-285-9	Rear Plate	1
14	195-286-9	Cylinder	1
15	195-287-9	Rotor	1
16	195-288-9	Blade	6
17	195-289-9	Front Plate	1
18	195-439-7	Front Casing	1
19	195-328-7	Anvil Bushing	1
20	195-901-9	Rear Liner Plate	1
21	195-902-9	Liner	1
22	173-319-2	Anvil (3/4SQ)	1
22-1	173-974-2	Roller (3.4 x 45)	2
23	195-440-9	Driving Blade	2
24	195-904-7	Front Liner Plate	1
25	195-905-9	Liner Casing	1
26	195-906-9	Liner Casing Setter	1

Index Number	Part Number	Description	Qty.
27	195-907-3	Relief Valve Spindle	1
28	195-969-6	Relief Valve Plug	1
29	195-970-3	Relief Valve	1
30	195-853-9	Head Cover Packing	1
31	195-867-9	Front Casing Packing	1
32	004-790-2	Suspension Ring	1
32-1	195-790-9	Suspension Ring	1
32-2	173-796-3	Suspension Bushing	1
33	944-003-0	Supporter Ring (3 x 5 x 1)	1
34	944-225-0	Supporter Ring (25.2 x 29.4 x 1.5)	1
35	945-942-0	Hexagon Round Head Bolt (M4 x 6)	1
36	952-108-0	Allen Head Dog Point Screw (M4 x 8)	1
37	945-220-0	Allen Head Bolt (M6 x 20)	4
38	945-955-0	Hex. Round Head Bolt (M5 x 16)	4
39	965-011-0	Heli-Sert (M5 x 1.5D)	4
40	965-021-0	Heli-Sert (M6 x 1.5D)	4
41	965-118-0	Heli-Sert (M18 x 1.5 x 1D)	1
42	966-100-0	Allen Head Plug (1/8)	1
43	970-308-0	Pin (H) (4 x 8)	4
44	970-342-0	Pin (H) (4 x 37)	1
45	971-163-0	Pin (2.5 x 23)	1
46	973-016-0	Roll Pin (2 x 16)	1
47	973-118-0	Roll Pin (3 x 18)	2
48	973-212-0	Roll Pin (4 x 12)	2
49	973-360-0	Roll Pin (8 x 10)	1
50	969-405-0	Pin (G) (3.5 x 8)	1
51	973-066-0	Roll Pin (2.5 x 6)	1
52	969-480-0	Pin (C) (8 x 40)	1
53	975-600-0	Spacer (20 x 1)	1

Index Number	Part Number	Description	Qty.
54	976-025-0	Spring (3 x 8.5)	1
55	976-796-0	Spring (4.3 x 48) (0.6)	2
56	977-180-0	Cone Spring (7.5 x 12 x 22)	1
57	979-320-0	Inner Snap Ring (IRTW-20)	1
58	981-208-0	Ball (5/16)	1
59	982-103-0	Ball Bearing (6003)	1
60	982-906-0	Ball Bearing (6905)	1
61	990-205-0	O-Ring (JW1516-5)	1
62	990-914-0	O-Ring (SNS-16)	2
63	990-974-0	O-Ring (SNS-6) (NOK)	1
64	990-941-0	O-Ring (SNS-55)	1
65	995-500-0	Teflon Seal (120)	1
66	990-971-0	O-Ring (SNS-3) (NOK)	3
67	990-916-0	O-Ring (SNS-18)	1
68	990-940-0	O-Ring (SNS-53)	1
69	965-058-0	HeliSert (M12 x 10)	1

ACCESSORIES

74	939-104-0	Allen Wrench (5mm)	1
75	939-109-0	Allen Wrench (2mm)	1
76	566-720-0	Dead Handle	1
77	962-013-0	Spring Washer (2-12S)	1
78	975-127-0	Spacer (20 x 13 x 1)	1

FOOTNOTES

Silencer Assembly = 195-885-9
Handle Assembly = 195-004-9

AIMCO also offers a complete line of standard & special adapters, bits, sockets and extensions.

When ordering spare parts, please specify tool type, part number and description.

AIMCO
10000 SE PINE, PORTLAND, OR 97216
503-254-6600 FAX 503-255-2615