UX-1000 & UX-1300 OIL-PULSE TOOLS

EXPLODED VIEW

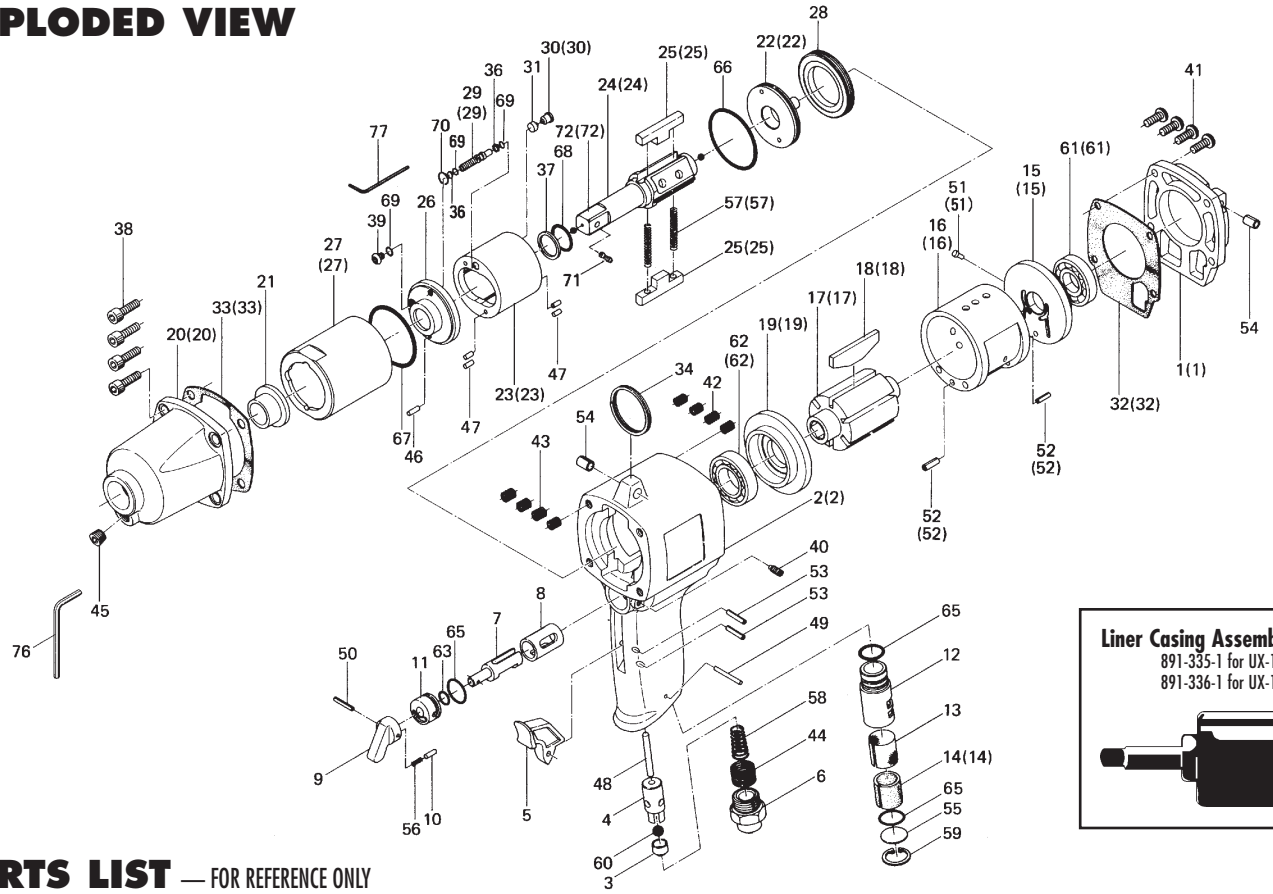

Liner Casing Assembly (OP-P)
891-335-1 for UX-1000
891-336-1 for UX-1300

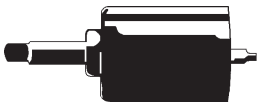

PARTS LIST — FOR REFERENCE ONLY

Index Number	Part Number	Description	Qty.
1	194-012-4	Head cover	1
2	194-025-4	Handle	1
3	188-100-1	Valve	1
4	063-102-3	Valve Bushing	1
5	026-107-7	Valve Lever	1
6	185-091-7	Air Inlet Bushing	1
7	199-210-1	Reverse Valve	1
8	199-211-1	Reverse Valve Bushing	1
9	023-212-4	Reverse Lever	1
10	054-220-1	Reverse Lever Notch	1
11	187-222-1	Reverse Lever Setter	1
12	194-780-4	Exhaust Stack	1
13	194-042-4	Silencer	1
14	194-835-4	Filter	1
15	041-285-7	Rear Plate	1
16	188-286-9	Cylinder	1
17	194-287-4	Rotor	1
18	175-288-9	Rotor Blade (PC)	6
19	194-289-4	Front Plate	1
20	194-439-4	Front Casing	1
21	189-328-8	Anvil Bushing	1
22	194-901-4	Rear Liner Plate	1
23	194-902-4	Liner	1
24	891-312-1	Anvil (OP-P)	1
25	194-440-4	Driving Blade	2
26	194-904-4	Front Liner Plate	1
27	194-905-4	Liner Casing	1
28	194-906-4	Liner Casing Cover	1
29	194-907-4	Relief Valve Spindle	1
30	194-969-4	Relief Valve Plug	1
31	195-970-3	Relief Valve	1
32	194-853-4	Head Cover Packing	1
33	194-867-4	Front Casing Packing	1
34	004-790-2	Suspension Ring	1
36	944-003-0	Supporter Ring (3 x 5 x 1)	2

Index Number	Part Number	Description	Qty.
37	944-215-0	Supporter Ring (16 x 19.9 x 1.5)	1
38	945-216-0	Allen Head Bolt (M6 x 16)	4
39	945-942-0	Hexagon Round Head Bolt (M4 x 6)	1
40	952-108-0	Allen Head Dog Point Screw (M4 x 8)	1
41	945-954-0	Hexagon Round Head Bolt (M5 x 16)	4
42	965-011-0	Heli-Sert (M5 x 1.5D)	4
43	965-021-0	Heli-Sert (M6 x 1.5D)	4
44	965-073-0	Heli-Sert (UNF5/8) (N6)	1
45	966-100-0	Allen Head Plug (1/8)	1
46	969-450-0	Pin (G) (3 x 8)	1
47	970-206-0	Pin (H) (3 x 8)	4
48	970-337-0	Pin (H) (4 x 36)	1
49	971-163-0	Pin (2.5 x 23)	1
50	973-016-0	Roll Pin (2 x 16)	1
51	980-008-0	Round Head Notch (2.4)	1
52	973-108-0	Roll Pin (3 x 8)	2
53	973-116-0	Roll Pin (3 x 16)	2
54	973-340-0	Roll Pin (6 x 10)	2
55	975-598-0	Round Plate (18 x 1)	1
56	976-025-0	Spring (3 x 8.5)	1
57	976-453-0	Spring (4.5 x 34.5)	2
58	977-175-0	Cone Spring (7.5 x 10.3 x 22)	1
59	979-318-0	Inner Snap Ring (IRTW-18)	1
60	981-208-0	Ball (5/16) Black	1
61	982-403-0	Ball Bearing (EE-4)	1
62	982-951-0	Ball Bearing (16003)	1
63	990-205-0	O-Ring (JW1516-5)	1
65	990-914-0	O-Ring (SNS-16)	3
66	990-930-0	O-Ring (SNS-40)	1
67	990-932-0	O-Ring (SNS-42)	1
68	990-156-0	O-Ring (P-16) (NTN)	1
69	990-971-0	O-Ring (SNS-3((NOK)	3
70	990-974-0	O-Ring (SNS-6) (NOK)	1
71	891-304-1	Socket Retainer Pin Assembly	1
72	194-319-4	Anvil (OP-O)	1

Index Number	Part Number	Description	Qty.	
(1)	194-012-6	Head Cover	1	■
(2)	194-025-6	Handle	1	■
(14)	194-835-6	Filter	1	■
(15)	194-285-6	Rear Plate	1	■
(16)	063-286-7	Cylinder	1	■
(17)	194-287-6	Rotor	1	■
(18)	194-288-6	Blade	6	■
(19)	194-289-6	Front Plate	1	■
(20)	194-439-6	Front Casing	1	■
(22)	194-901-6	Rear Liner Plate	1	■
(23)	194-902-6	Liner	1	■
(24)	891-313-1	Anvil (OP-P)	1	■
(25)	194-440-7	Driving Blade	2	■
(27)	194-905-6	Liner Casing	1	■
(29)	195-907-3	Relief Valve Spindle	1	■
(30)	195-969-3	Relief Valve Plug	1	■
(32)	166-853-4	Head Cover Packing	1	■
(33)	194-867-6	Front Casing Packing	1	■
(51)	973-066-0	Roll Pin (2.5 x 6)	1	■
(52)	973-212-0	Roll Pin (4 x 12)	2	■
(57)	976-453-0	Spring (4.5 x 34.5)	2	■
(61)	982-404-0	Ball Bearing (EE-5)	1	■
(62)	982-905-0	Ball Bearing (6904)	1	■
(72)	194-319-7	Anvil (OP-O)	1	■

ACCESSORIES

76	939-104-0	Allen Wrench (5mm)	1
77	939-109-0	Allen Wrench (2mm) (64 x 64)	1

AIMCO also offers a complete line of standard & special adapters, bits, sockets and extensions.

FOOTNOTES

■ = Special parts for model UX-1300 (other parts unchanged)

When ordering spare parts, please specify tool type, part number and description.

10000 SE PINE, PORTLAND, OR 97216
503-254-6600 FAX 503-255-2615

REVISED 4/00