U-410D & U-410 U-WRENCH

EXPLODED VIEW

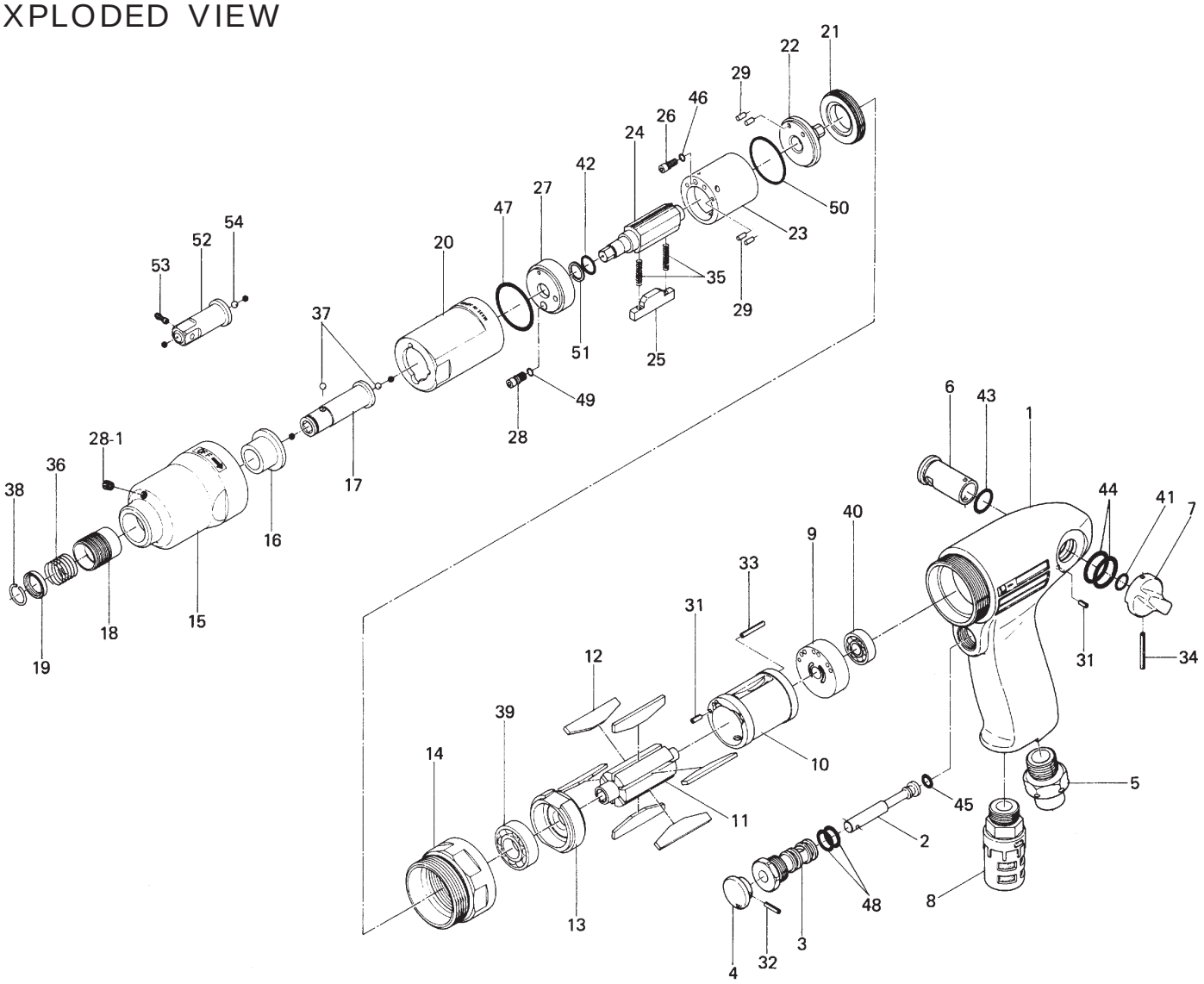

PARTS LIST — FOR REFERENCE ONLY

Index Number	Part Number	Description	Qty.
1	191-025-5	Handle	1
2	603-100-2	Valve	1
3	606-101-1	Valve Bushing	1
4	603-107-2	Throttle Trigger	1
5	191-091-5	Air Inlet Bushing	1
6	432-210-1	Reverse Valve	1
7	418-212-1	Reverse Lever	1
8	018-885-7	Silencer Assembly	1
9	891-122-1	Rear Plate	1
10	418-286-1	Cylinder	1
11	191-287-6	Rotor	1
12	197-288-6	Blade	6
13	891-123-1	Front Plate	1
14	197-035-6	Handle Connector	1
15	191-439-7	Front Casing	1
16	190-328-6	Anvil Bushing	1
17	197-350-0	Driver Anvil	1
18	011-351-1	Bit Sleeve	1
19	011-352-1	Bit Spacer	1
20	191-905-6	Liner Casing	1
21	197-906-6	Liner Casing Setter	1

Index Number	Part Number	Description	Qty.
22	197-901-7	Rear Liner Plate	1
23	191-902-6	Liner	1
24	191-319-6	Anvil	1
25	198-440-1	Driving Blade	1
26	191-970-6	Relief Valve	1
27	191-904-6	Front Liner Plate	1
28	178-742-9	Oil Plug	1
28-1	966-110-0	Allen Head Plug (PT1/16)	1
29	970-091-0	Pin(H) (2 x 4.5)	4
30	969-449-0	Pin (G) (3 x 6)	1
31	973-006-0	Roll Pin (2 x 6)	2
32	973-010-0	Roll Pin (2 x 10)	1
33	973-016-0	Roll Pin (2 x 16)	1
34	973-022-0	Roll Pin (2 x 22)	1
35	976-216-0	Spring (2.8 x 15)	2
36	976-327-0	Spring (13.5 x 11)	1
37	981-002-0	Ball (1/8)	2
38	978-117-0	Snap Ring (11.7 x 1.0)	1
39	982-100-0	Ball Bearing (6000)	1
40	982-401-0	Ball Bearing (EE2)	1
41	990-003-0	O-Ring (P5)	1

Index Number	Part Number	Description	Qty.	
42	990-951-0	O-Ring (PB) (NOK)	1	
43	990-007-0	O-Ring (P9)	1	
44	990-014-0	O-Ring (P14)	2	
45	990-203-0	O-Ring (JW1516-3)	1	
46	990-320-0	O-Ring (ARP568-003)	1	
47	990-331-0	O-Ring (JW1530-21)	1	
48	990-610-0	O-Ring (8 x 2)	2	
49	990-900-0	O-Ring (SNS-2)	1	
50	990-919-0	O-Ring (SNS-22)	1	
51	944-007-0	Supporter Ring (7.85 x 11.1 x 1)	1	
52	891-343-1	SQ Drive Anvil	1	❍
53	891-300-1	Socket Retainer Pin Assembly	1	❍
54	981-002-0	Ball (1/8)	1	❍

ACCESSORIES

57	939-090-0	Allen Wrench (1.5mm) (55 x 55)	1
58	939-104-0	Allen Wrench (5mm)	1

AIMCO also offers a complete line of standard & special adapters, bits, sockets and extensions.

FOOTNOTES

❍ = Parts for U-410

When ordering spare parts, please specify tool type, part number and description.

AIMCO

10000 SE PINE, PORTLAND, OR 97216
503-254-6600 FAX 503-255-2615

REVISED 6/98