α ALPHA 130 OIL-PULSE TOOLS

EXPLODED VIEW

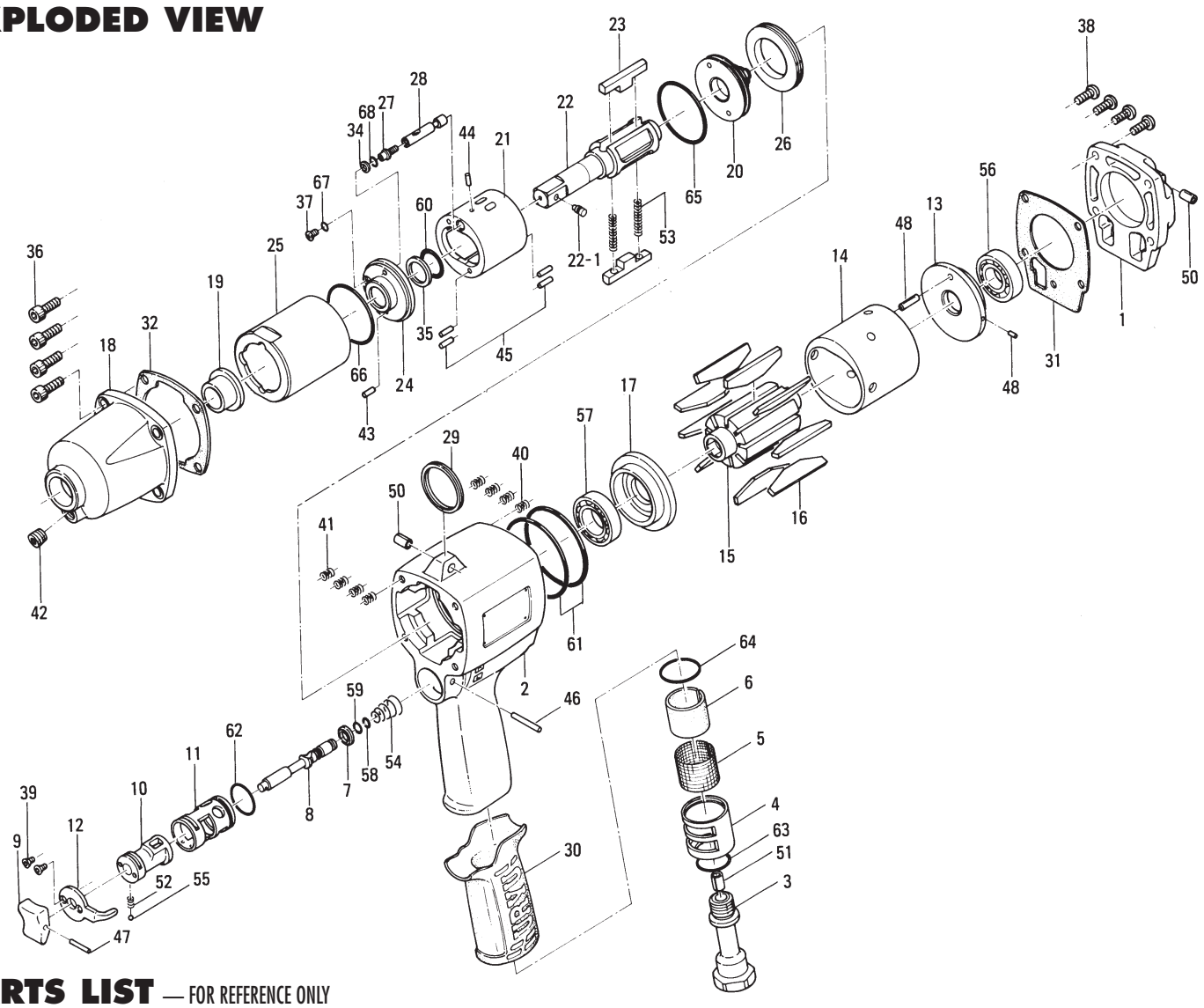

PARTS LIST — FOR REFERENCE ONLY

Index Number	Part Number	Description	Qty.
1	194-012-6	Head Cover	1
2	163-025-3	Handle	1
3	163-091-4	Air Inlet Bushing	1
4	163-780-3	Exhaust Bushing	1
5	163-042-3	Silencer	1
6	163-835-3	Filter	1
7	163-100-3	Valve	1
8	163-104-3	Valve Rod	1
9	177-107-5	Valve Lever	1
10	163-210-3	Reverse Valve	1
11	163-211-3	Reverse Valve Bushing	1
12	163-212-3	Reverse Lever	1
13	163-285-3	Rear Plate	1
14	163-286-3	Cylinder	1
15	163-287-3	Rotor	1
16	163-288-3	Blade	9
17	163-289-3	Front Plate	1
18	194-439-6	Front Casing	1
19	189-328-8	Anvil Bushing	1
20	194-901-6	Rear Liner Plate	1
21	166-902-3	Liner	1
22	891-313-1	Anvil (OP-P)	1
22-1	891-304-1	Socket Pin Assembly	1
23	194-440-7	Driving Blade	2
24	175-904-7	Front Liner Plate	1
25	194-905-6	Liner Casing	1
26	194-906-4	Liner Casing Setter	1
27	175-907-9	Relief Valve Spindle	1
28	163-970-3	Relief Valve	1
29	004-790-2	Suspension Ring	1
30	173-842-0	Handle Cover	1
31	194-853-6	Handle Cover Packing	1
32	194-867-6	Front Casing Packing	1
34	944-205-0	Supporting Ring (5.1 x 7 x 1)	1
35	944-215-0	Supporting Ring (16 x 19.9 x 1.5)	1
36	945-216-0	Allen Head Bolt (M6 x 16)	4
37	945-942-0	Allen Head Bolt (M4 x 6) (S)	1
38	945-955-0	Allen Head Bolt (M5 x 16)	4
39	948-423-0	Allen Flush Head Bolt (M3 x 6)	2
40	965-011-0	Heil-Sert (M5 x 1.5D)	4
41	965-021-0	Heil-Sert (M6 x 1.5D)	4
42	966-100-0	Allen Head Plug (1/8)	1
43	969-450-0	Pin (G) (3 x 8)	1
44	970-093-0	Pin (H) (2 x 6)	1
45	970-206-0	Pin (H) (3 x 8)	4
46	971-126-0	Pin (2 x 26)	1
47	973-014-0	Roll Pin (2 x 14)	1
48	973-066-0	Roll Pin 2.5 x 6)	1
49	973-212-0	Roll Pin (4 x 12)	1
50	973-340-0	Roll Pin (6 x 10)	2
51	973-360-0	Roll Pin (8 x 10)	1
52	976-006-0	Spring (3 x 5) (0.4)	1
53	976-453-0	Spring (4.5 x 34.5) (0.6)	2
54	977-228-0	Cone Spring (9 x 14.5 x 22)	1
55	981-002-0	Ball (1/8)	1
56	982-404-0	Ball Bearing (EE-5)	1
57	982-905-0	Ball Bearing (69040)	1
58	990-002-0	O-Ring (P4)	1
59	990-004-0	O-Ring (P6)	1
60	990-156-0	O-Ring (P16) (NTN)	1
61	990-316-0	O-Ring (ARP568-035)	2
62	990-916-0	O-Ring (SNS-18)	1
63	990-918-0	O-Ring (SNS-20)	1
64	990-920-0	O-Ring (SNS-25)	1
65	990-930-0	O-Ring (SNS-40)	1
66	990-932-0	O-Ring (SNS-42)	1
67	990-971-0	O-Ring (SNS-3) (NOK)	1
68	990-972-0	O-Ring (SNS-4) (NOK)	1

ACCESSORIES

70	939-104-0	Allen Wrench (5mm)	1
71	939-105-0	Allen Wrench (4mm)	1
72	939-109-0	Allen Wrench (2mm)	1

FOOTNOTES

AIMCO also offers a complete line of standard & special adapters, bits, sockets and extensions.

When ordering spare parts, please specify tool type, part number and description.

10000 SE PINE, PORTLAND, OR 97216
503-254-6600 FAX 503-255-2615

REVISED 2/99